KUZU®

洁净管道系列

TKF® TK-FULIQUN

减压阀系列

来自中国

气体减压阀制造商

为全球提供气体安全输送解决方案



提供精准气体输送解决方案

Provide precise gas delivery solutions

CE CNAS ISO 9001

库祖智造（上海）流体设备有限公司

Kuzu Made (Shang Hai)Fluid Equipment Co.,Ltd

www.sh-kuzu.com











ABOUT US 关于我们

库祖智造(上海)流体设备有限公司Kuzu made (Shanghai) Fluid Equipment Co. Led

库祖公司在2015年引进台湾注册TKF品牌的减压阀商标,于2016年在中国上海保税区成立的企业,目前公司旗下拥有KUZU以及TKF两大品牌。上海公司主要研发制造气体低压报警控制系统设备、集中供气系统、气体泄漏监控报警系统、气体减压器、高压金属软管、卡套及焊接接头配件、过滤器、压力表、电磁阀、流量计、气体纯化器、供气汇流排、自动切换减压阀组产品等,公司在成立初期就设有技术支持部为客户提供产品技术咨询、工程设计、培训及产品维修等服务。

In 2015, Kuzu acquired the regulator trademark registered in Taiwan under the TKF brand, and in 2016, the company was established in Shanghai Free Trade Zone, China.Up to now, the company owns two major brands, KUZU and TKF.Our company mainly focuses on R&D and manufacture of equipment related to gas storage and control.The wide range of products offered includes low pressure alarm control system、centralized gas supply system、gas leakage monitoring and alarm system、regulator、high pressure metal hose、Tube fitting and welding fittings、filter、pressure gauge、solenoid valve, flow meter、gas purifier, gas supply bus-bar, automatic switching pressure regulationseries products, etc.In the early days of its establishment, the company has a technical support department to provide customers with product technical consultation, engineering design, training and product maintenance services.



质量体系
Quality system



专利证书
Registered trademark

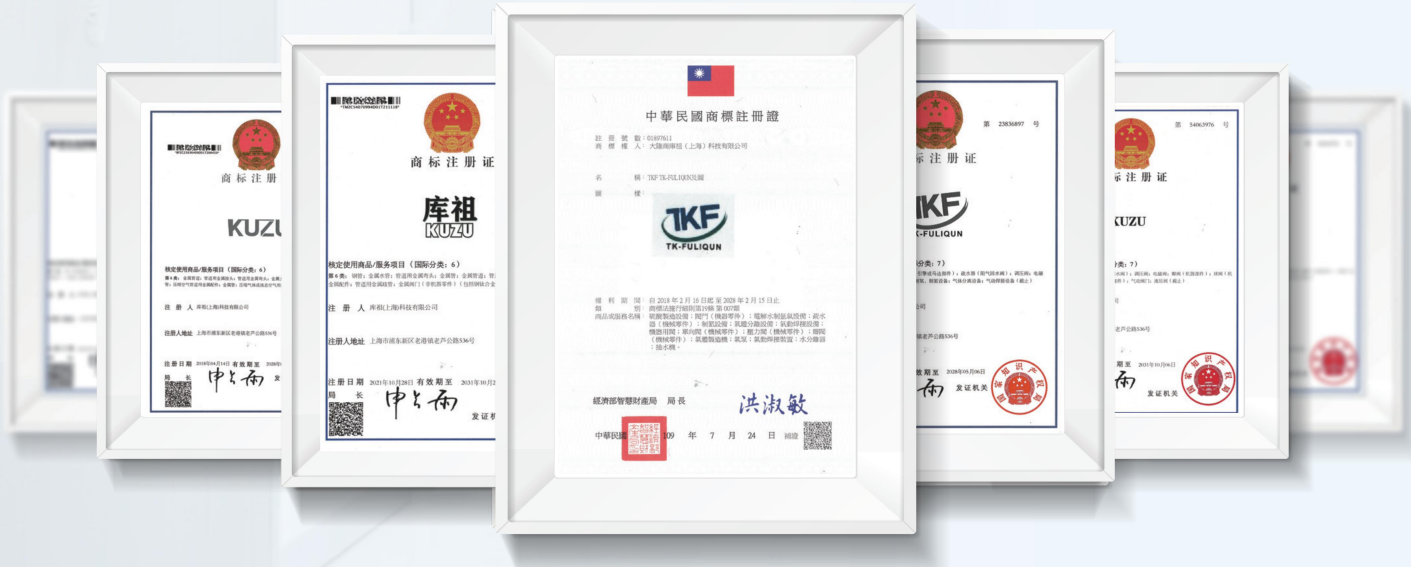

注册商标
Patent certificate

目录

Table of contents

01
管道系列 Pipe/Tube seriesBA/EP 1-4

- 管道系列 1-2
- 焊接配件系列 3-4

02
卡套和转换接头系列 Tube Fittings and Adapter Fitting 5-27

- 目录 6
- 内部结构 7-8
- 安装说明 9-10
- 卡套直接 11
- 变径卡套直接 12
- 外螺纹接头 13
- 内螺纹接头 14
- 穿板直接 15
- 卡套弯头 16
- 弯头卡套转NPT外螺纹 17
- 管转卡套接头/三通/旁路NPT内螺纹 18
- 三通/旁路NPT外螺纹/变径卡套三通 19
- 球阀 20
- 针型阀 21-22
- 单向阀 23-24
- 过滤器 25-26
- 阻火器 27

03
高纯系列 High purity series 28-38

- 目录 29
- 安装步骤 30
- 特征 31
- 微型弯头 32
- 微型变径弯头 32
- 菱形三通 33
- 微型45°C弯头 33
- 微型三通 34
- 微型变径三通 34
- 微型焊接大小头 35
- 公头 35
- 母头 36
- 垫片 36
- 堵头 37
- VCR接头 38

04

UHP系列 UHp series **39-56**

- 目录 40
- TKF-Re1-1系列单级小流量减压器 41-42
- TKF-Re1-2系列高压减压器 43-44
- TKF-Re1-3系列双级减压器 45-46
- TKF-Re1-4系列低压背压阀 47-48
- 隔膜阀系列 49-50
- 气动隔膜阀系列 51-52
- 工业用过流量阀 53-54
- 直通型颗粒物过滤器 55-56

05

实验室系列 Laboratory series **57-87**

- 集中供气流程图 58

目录

Table of contents

- 集中供气效果图 59
- 二级减压阀 60
- 一级减压阀 61-62
- 半自动切换系列 TKF-1 63-64
- 半自动切换系列 TKF-2 65-66
- 手动切换系列 TKF-1-1B 67-68
- 单侧供气系列 TKF-3 69-70
- 双侧手动切换系列 TKF--1-9 71-72
- 半自动切换系列TKF-2-2A 73-74
- 气体控制终端系列 TKF-5 75
- 气体控制终端系列 TKF-5-1 76
- 气体控制终端系列 TKF-5-2 77
- 气体控制终端系列 TKF-5-3 78
- 气体控制终端系列 TKF-5-4 79
- 气体控制终端系列 TKF-5-5 80
- 气体控制终端系列 TKF-5-6 81
- 气体控制终端系列 TKF-5-8 82
- 气体控制终端系列 TKF-5-9 83
- 汇流排系列 84
- 金属导管|钢瓶接头 85
- 压力表 86
- 全自动切换系统 87

06

全自动气柜/气架 Automatic Gas Control Cabinet/Rack **88-94**

- 全自动气柜/气架 88
- 全自动气柜 89-90
- 全自动气架 91-92

- 普通气瓶柜 ---- 93-94
- 全自动气柜/气架 ---- 88
- 全自动气柜 ---- 89-90
- 全自动气架 ---- 91-92
- 普通气瓶柜 ---- 93-94

07
防爆移动气体房 Explosion-proof Mobile Gas House ---- 95-100

- 前言·优势·规范 ---- 96
- 功能优势 ---- 97-99
- 安装尺寸 ---- 100

08
综合监测控制系统 Intgrated Monitoring and Control System ---- 101-106

- 综合监测控制系统 ---- 102
- 气体监控报警器 ---- 103
- 点型气体探测器 ---- 104
- 切断阀 ---- 105
- 加热器 ---- 105
- 压力传感器 ---- 106

09
焊接、切割系列 COMPLETE SOLUTION FOR PIPELINE CUTTING AND WELDING ---- 107-112

- 产品概述 ---- 107
- 性能 ---- 108
- 小型焊接焊机头 5H/1OH ---- 109
- 平口机系列 ---- 110
- 钨极磨削杭 ---- 111
- 气体特性表 ---- 112

管道系列

Pipe/Tube seriesBA/EP



管道系列

Pipe/Tube seriesBA/EP

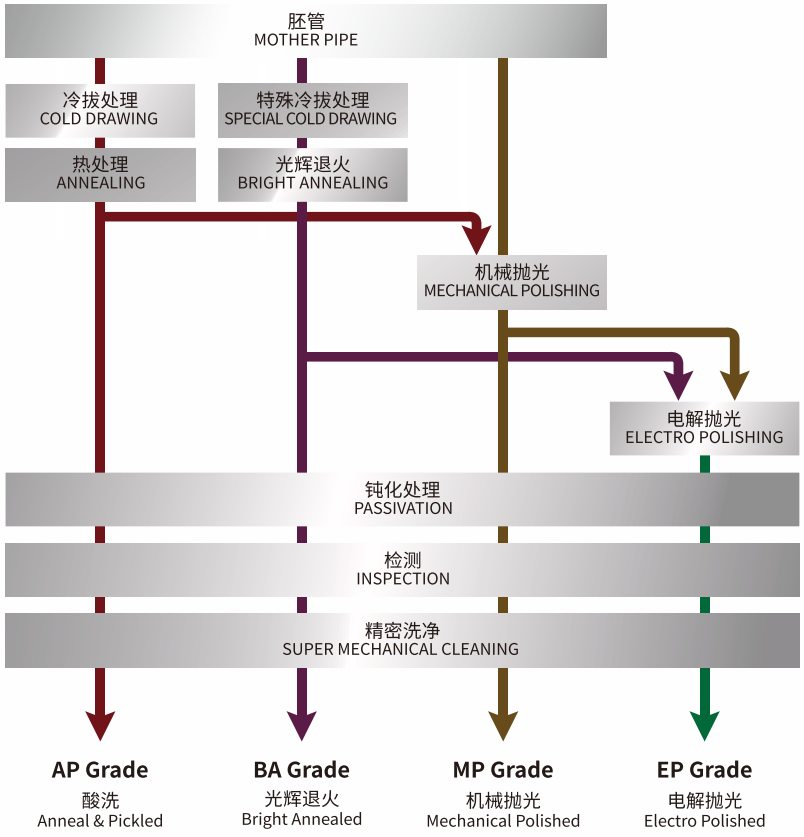

洗净准备
Pre-Cleaning

↓

洗净设置
Setting

↓

温超纯水超音波浸渍洗净
Warm, ultra pure water supersonic immerse-cleaning

↓

温超纯水内外表面洗净
Warm, ultra pure water inner and outer surface cleaning

↓

高温超纯水内外表面洗净
Hot, ultra pure water inner and outer surface cleaning

↓

高温氮气干燥
High temperature N2 drying

↓

两端封管帽
Capping

↓

单层(双层)静电薄膜包装
Clean single (double) packing

↓

包装/ 发货
Packing / Delivery

订购指南 Order Information

规格	型号	尺寸		材质	使用压力(Mpa)	长度
Tube OD In	Ordering Number	OD(mm)	T(mm)	Material	Working Pressure(Mpa)	Length
1/4"	SS-K4-TUBE-X-T-L	6.35	1.0(0.89)	sus316L	47	4M/6M
3/8"	SS-K6TUBE-X-T-L	9.53	1.0(0.89)	sus316L	46	
1/2"	SS-K8-TUBE-X-T-L	12.70	1.0(1.24)	sus316L	48	
3/4"	SS-K12-TUBE-X-T-L	19.05	1.65(1.24)	sus316L	45	
1"	SS-K16-TUBE-X-T-L	25.40	1.65(1.24)	sus316L	43	

备注:如选择洁净等级 示例:SS-K4-TUBE-X-T-L
X:代表选择洁净(表面处理)等级 21代表EP 20代表BA T:代表选择管壁厚 L:代表选择管的长度

Note: To Order Tubing For Opinal Surface Finishes , Example: SS-K4-TUBE-X-T-L
X-Surface Finishes, Use 21 For EP (Electropolished and Specially Cleaned to Meet UHP Syetem Requirements), Use 20 For BA T- Tube Wall Thickness L-Length of Tubing

焊接配件系列

Welding accessory series



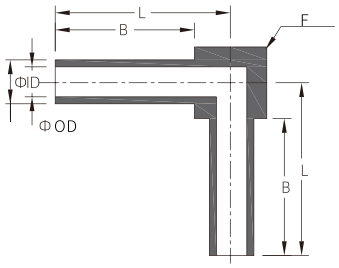

订购指南 Order Information

焊接弯头 Welding Elbow

规格	型号	尺寸						材质
Tube OD In	Ordering Number	OD (mm)	ID (mm)	B (mm)	L (mm)	F (mm)	T (mm)	Material
1/4"	SS-LE4-X-T	6.35	4.35	23	30	15	1.0(0.89)	sus316L
3/8"	SS-LE06-X-T	9.53	7.53	23	32	18	1.0(0.89)	sus316L
1/2"	SS-LE08-X-T	12.70	10.22	23	34	23	1.0(1.24)	sus316L
3/4"	SS-LE12-X-T	19.05	15.75	25	36	25	1.65(1.24)	sus316L
1"	SS-LE16-X-T	25.40	22.10	28	45	33	1.65(1.24)	sus316L

备注:如选择洁净等级 示例:SS-LE4-X-T
X:代表选择洁净(表面处理)等级 21代表EP 20代表BA T:代表选择管壁厚

Note: To Order Tubing For Opinal Surface Finishes , Example: KUZU-LE4-X-T
X-Surface Finishes, Use 21 For EP (Electropolished and Specially Cleaned to Meet UHP Syetem Requirements), Use 20 For BA
T- Tube Wall Thickness



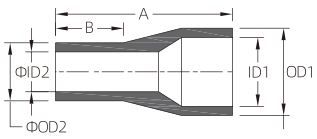

订购指南 Order Information

焊接大小头 Reducer Welding Fitting

规格	型号	尺寸							材质
Tube OD In	Ordering Number	OD1 (mm)	OD2 (mm)	ID1 (mm)	ID2 (mm)	A (mm)	B (mm)	T (mm)	Material
3/8"-1/4"	SS-RLU6-4-X-T	9.53	6.35	7.53	4.35	46	21	1.0(0.89)	sus316L
1/2"-1/4"	SS-RLU8-4-X-T	12.70	6.35	10.22	4.35	50	23	1.0(1.24)-1.0(0.89)	sus316L
1/2"-3/8"	SS-RLU8-6-X-T	12.70	9.53	10.22	7.53	50	23	1.0(1.24)-1.0(0.89)	sus316L
3/4"-1/4"	SS-RLU12-4-X-T	19.05	6.35	15.75	4.35	45	23	1.65(1.24)-1.0(0.89)	sus316L
3/4"-3/8"	SS-RLU12-6-X-T	19.05	9.53	15.75	7.53	51	23	1.65(1.24)-1.0(0.89)	sus316L
3/4"-1/2"	SS-RLU12-8-X-T	19.05	12.70	15.75	10.22	52	25	1.65(1.24)-1.0(1.24)	sus316L
1"-1/4"	SS-RLU16-4-X-T	25.40	6.35	22.10	4.35	53.5	23	1.65(1.24)-1.0(0.89)	sus316L
1"-3/8"	SS-RLU16-6-X-T	25.40	9.53	22.10	7.53	53.5	23	1.65(1.24)-1.0(0.89)	sus316L
1"-1/2"	SS-RLU16-8-X-T	25.40	12.70	22.10	10.22	53.5	24	1.65(1.24)-1.0(1.24)	sus316L
1"-3/4"	SS-RLU16-10-X-T	25.40	19.05	22.10	15.75	53.5	25	1.65(1.24)	sus316L

备注:如选择洁净等级 示例:SS-RLU6-4-X-T
X:代表选择洁净(表面处理)等级 21代表EP 20代表BA T:代表选择管壁厚

Note: To Order Tubing For Opinal Surface Finishes , Example: Kuzu-RLU6-4-X-T
X-Surface Finishes, Use 21 For EP (Electropolished and Specially Cleaned to Meet UHP Syetem Requirements), Use 20 For BA
T- Tube Wall Thickness

焊接配件系列

Welding accessory series



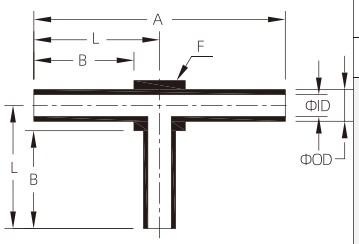

订购指南 Order Information

焊接三通 Welding Tee

规格	型号	尺寸							材质
Tube OD In	Ordering Number	OD (mm)	ID (mm)	A (mm)	B (mm)	L (mm)	F (mm)	T (mm)	Material
1/4"	SS-LE4-X-T	6.35	4.35	60	23	30	14	1.0(0.89)	sus316L
3/8"	SS-LE06-X-T	9.53	7.53	60	21	30	12	1.0(0.89)	sus316L
1/2"	SS-LE08-X-T	12.7	10.22	71	21	30	18	1.0(1.24)	sus316L
3/4"	SS-LE12-X-T	19.05	15.75	74	25	36.5	24	1.65(1.24)	sus316L
1"	SS-LE16-X-T	25.4	22.1	90	28	44	24	1.65(1.24)	sus316L

备注:如选择洁净等级 示例:SS-LT4-X-T
X:代表选择洁净(表面处理)等级 21代表EP 20代表BA T:代表选择管壁厚

Note: To Order Tubing For Opinal Surface Finishes , Example: KUZU-LT4-X-T
X-Surface Finishes, Use 21 For EP (Electropolished and Specially Cleaned to Meet UHP Syetem Requirements), Use 20 For BA
T- Tube Wall Thickness

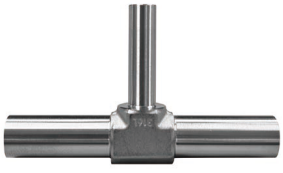

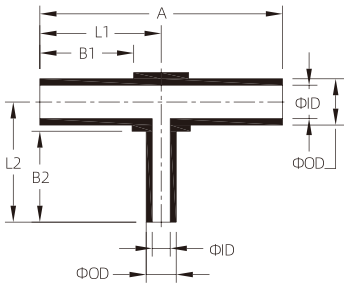

订购指南 Order Information

焊接变径三通 Welding Tee Reducer

规格	型号	尺寸											材质
Tube OD In	Ordering Number	OD1 (mm)	OD2 (mm)	ID1 (mm)	ID2 (mm)	A (mm)	B1 (mm)	L1 (mm)	B2 (mm)	L2 (mm)	F (mm)	T (mm)	Material
3/8"-1/4"	SS-RLT6-4-X-T	9.53	6.35	7.53	4.35	52	20	26	20	26	12	1.0(0.89)	sus316L
1/2"-1/4"	SS-RLT8-4-X-T	12.7	6.35	10.22	4.35	56	20	28	20	28	16	1.24(1.0)&1.0(0.89)	sus316L
1/2"-3/8"	SS-RLT8-6-X-T	12.7	9.53	10.22	7.53	56	20	28	20	28	16	1.24(1.0)&1.0(0.89)	sus316L
3/4"-1/4"	SS-RT12-4-X-T	19.05	6.35	15.75	4.35	58	23	34	20	31	22	1.65(1.24)&1.0(0.89)	sus316L
3/4"-3/8"	SS-RTT12-6-X-T	19.05	9.53	15.75	7.53	58	23	34	20	31	22	1.65(1.24)&1.0(0.89)	sus316L
3/4"-1/2"	SS-RTT12-8-X-T	19.05	12.7	15.75	10.22	58	23	34	20	31	22	1.65(1.24)&1.24(1.0)	sus316L
1"-1/4"	SS-RT16-4-X-T	25.4	6.35	22.1	4.35	75	23.5	37	20	34	28	1.65(1.24)&1.0(0.89)	sus316L
1"-3/8"	SS-RT16-6-X-T	25.4	9.53	22.1	7.53	75	23.5	37.5	20	34	28	1.65(1.24)&1.0(0.89)	sus316L
1"-1/2"	SS-RTT16-8-X-T	25.4	12.7	22.1	10.22	75	23.5	37.5	20	34	28	1.65(1.24)&1.24(1.0)	sus316L
1"-3/4"	SS-RTT16-12-X-T	25.4	19.05	22.1	15.75	75	23.5	37.5	23	37	28	1.65(1.24)&1.24(1.0)	sus316L

备注:如选择洁净等级 示例:SS-RLT6-4-X-T
X:代表选择洁净(表面处理)等级 21代表EP 20代表BA T:代表选择管壁厚

Note: To Order Tubing For Opinal Surface Finishes , Example: Kuzu-RLT6-4-X-T
X-Surface Finishes, Use 21 For EP (Electropolished and Specially Cleaned to Meet UHP Syetem Requirements), Use 20 For BA
T- Tube Wall Thickness

卡套管接头和转换接头

Tube Fittings and Adapter Fitting

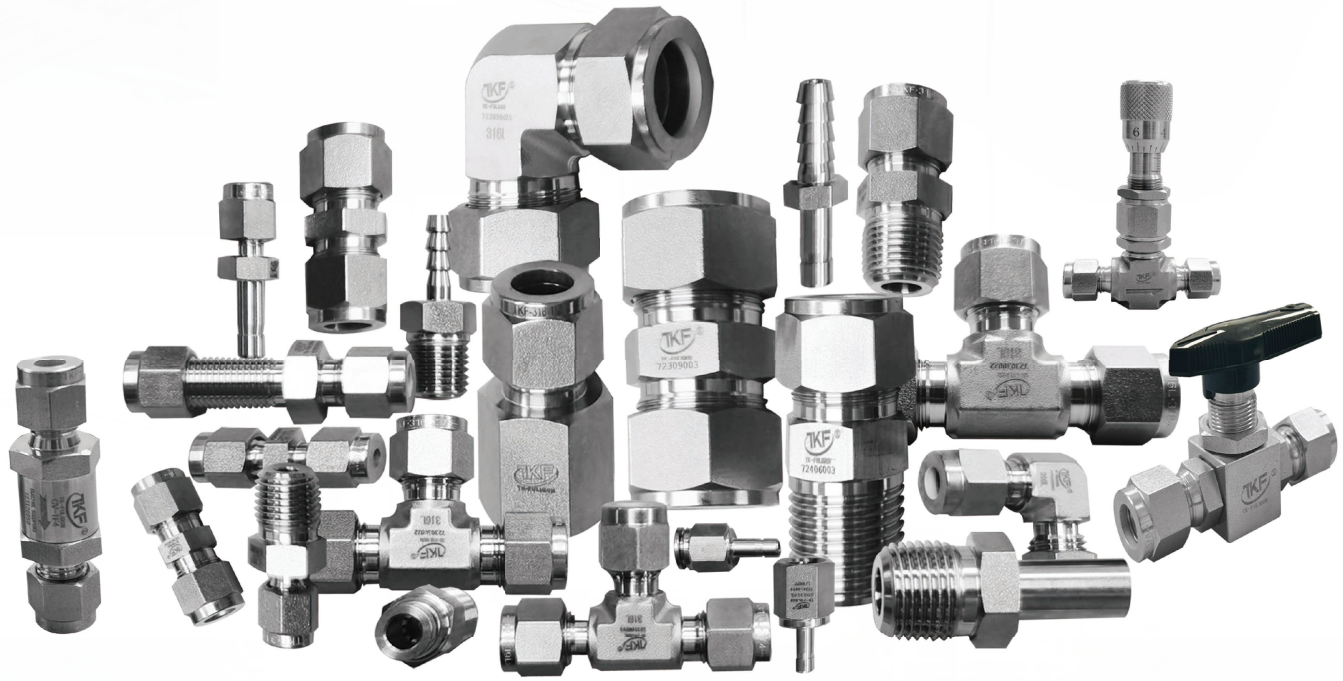

卡套管接头和转换接头

Tube Fittings and Adapter Fitting



直通接头
Union



变径卡套直接
Reducing Union



外螺纹接头
Male Connectsors



内螺纹接头
Female Connector



穿板直接
Bulkhead Union



卡套弯头
Union Elbow



弯头卡套转NPT外螺纹
Connects Metric Tubes TO Male NPT



管转卡套接头
TUBE to Tube fitting



三通/旁路NPT内螺纹
Connects Fractional Tubes To Female NPT



三通/旁路NPT 外螺纹
Connects Fractional Tubes To Male NPT



卡套三通
Union Tee



球阀
Ball valve



针阀
Needle valve



单向阀
Check valve



过滤器
Filter



阻火器
Fire Arrester

卡套管接头和转换接头

Tube Fittings and Adapter Fitting



卡套管接头和转换接头 Tube Fittings and Adapter Fitting

◆可用于尺寸为1/16至2in.和2至18mm 的卡套管Available in tube size from 1/16 to 2In and 2 to 50mm
◆首次安装后具有一致的可检测性Consistent gaugeablity upon initial make-up
◆易于拆开和重新紧固Easy to disconnect and retighen
◆有各种材料和结构Wide variety of materials and configurations

特点 Features

◆活动负载和双卡套设计Two ferrule mechanical grip Design
◆易于安装Easy to Installation
◆安装时不会把扭矩传输到卡套管上No toque is transmitted to tube during installation

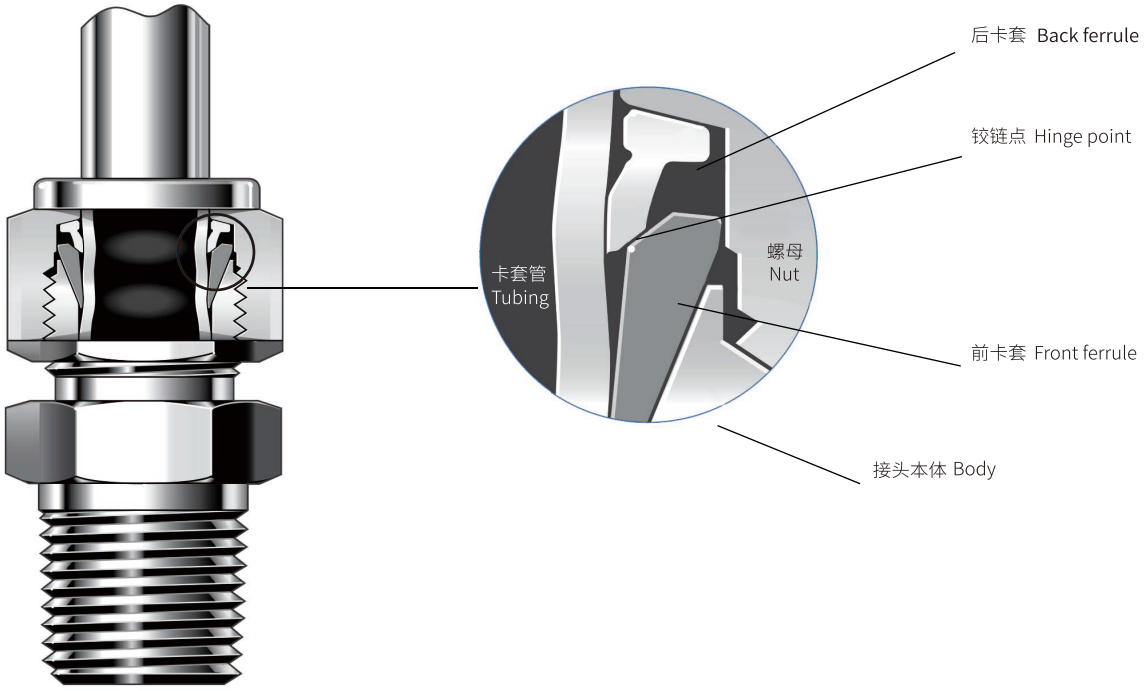

双卡套的机械式抓紧设计 Two-ferrule mechanical grip design

双卡套将密封功能和对卡套管的抓紧功能分开
Allows the front to seal while the back ferrule grips
每个卡套都针对其相应的功能进行了优化
Overcomes variations in tube materials,wall thickness and hardness

在装配具有先进几何形状设计特点的管接头时(如上图所示)，前卡套被推入到接头本体和卡套管形成主密封，而后卡套向内产生铰链作用以对卡套管形成强有力的抓紧。后卡套的几何形状有助于产生先进的工程铰链一夹箍作用，这种作用可把轴向运动转化为卡套管上的径向挤压作用，操作时只需要很小的装配扭矩。

As the nut is turned the back ferrle axially advances the front ferrle and radially appiles an effective tube grip.
The front ferrle creates a seal against the fitting body and a sael on the tubing OD.
The two ferrle separate sealing and tube retain functions, each ferrle optimized for its function.

安装说明

Installation Instruction

1in/25mm及以下的TKF卡套管接头TKF tube fitting of 1in/25mm and below

以下说明既适用于传统接头也适用于具有先进的后卡套几何形状的接头。The following instructions apply to both traditional fittings and fittings with advanced rear geometry.

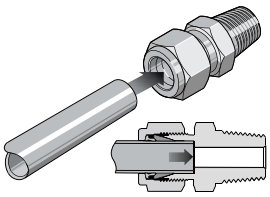

把卡套管完全插入接头内并顶住肩部；用手指将螺母拧紧。高压应用和高安全系数系统：进一步拧紧螺母，使卡套管无法用手转动或无法沿轴向在接头内移动。

Fully insert the tube into the fitting and against the shoulder; rotate the nut finger-tight.High-pressure applications and high safety-factor systems: Further tighten the nut until the tube will not turn by hand or move axially in the fitting.

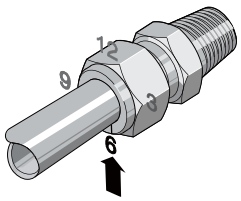

在6点钟的位置给螺母作标记。
Mark the nut at the 6 o’ clock position.

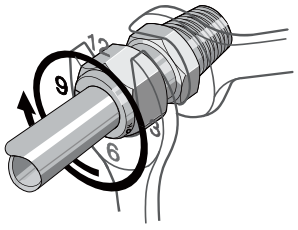

牢牢固定接头本体，将螺母紧固一又四分之一圈以停在9点钟的位置。对于1/16,1/8和3/16 in.;2,3和4mm的卡套管接头，仅将螺母紧固四分之三圈使其停在3点钟的位置。

While holding the fitting body steady, tighten the nut one and one-quarter turns to the 9 o’ clock position.For 1/16, 1/8, and 3/16 in.; 2, 3, and 4 mm tube fittings, tighten the nut only three-quarters turn to the 3 o’ clock position.

超过1 in./25mm 的卡套管接头 Tube Fittings Over 1 in./25 mm

以下说明既适用于传统接头也适用于具有先进的后卡套几何形状的接头。

1.使用接头液压预装装置(MHSU)把卡套预装在卡套管上。
2.在本体螺纹和后卡套的后表面上涂少量随接头提供的润滑剂。
1. Preswage the ferrules onto the tube using a multihead hydraulic swaging unit (MHSU).
2. Apply the lubricant packaged with the fitting lightly to the body threads and the rear surface of the back ferrule. For gas service also apply lightly to the front angled surface of the front ferrule

3.将带有预装卡套的卡套管插入接头内，直到前卡套顶在接头本体上；用手拧紧螺母。
4.在6点钟的位置给螺母作标记。
3. Insert the tube with preswaged ferrules into the fitting until the front ferrule seats against the fitting body; rotate the nut finger-tight.
4. Mark the nut at the 6 o’ clock position.

5.牢牢固定接头本体，将螺母紧固二分之一圈以使其停在12点钟的位置。使用检测规确认接头已经充分紧固。
5. Secure the coupling body and tighten the nut one and a half turns so that it stops at the 12 o'clock position. Confirm that the coupling sufficiently tightened using a detection gauge.

复装 一 所有尺寸Reassembly—All Sizes

您可以多次反复拆卸和复装卡套管接头。You may disassemble and reassemble tube fittings many times.

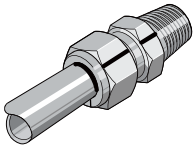

拆卸之前，沿螺母背面在卡套管上作标记；在螺母和接头本体的平面上画一条线这些标记用于保证复装时把螺母转到先前紧固的位置。
Prior to disassembly, mark the tube at the back of the nut; mark a line along the nut and fitting body flats.Use these marks to ensure that you return the nut to the previously pulled_x0002_up position.

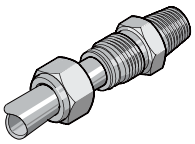

将带有预装卡套的卡套管插入接头内直到前卡套顶在接头本体上。1 in./25mm 以上尺寸：必要时，再在本体螺纹和后卡套背面上涂少量润滑剂。
nsert the tube with preswaged ferrules into the fitting until the front ferrule seats against the fitting body.Over 1 in./25 mm sizes: If needed, reapply lubricant lightly to the body threads and the rear surface of the back ferrule.

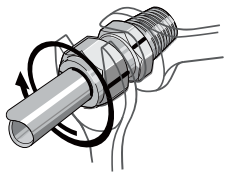

牢牢固定接头本体，使用扳手把螺母转到卡套管及本体平面上的标记指示的先前紧固位置。这时，您会感觉到阻力明显增大。轻轻拧紧螺母。
While holding the fitting body steady, rotate the nut with a wrench to the previously pulled-up position, as indicated by the marks on the tube and flats. At this point, you will feel a significant increase in resistance. Tighten the nut slightly.

安装说明

Installation Instruction

安装说明Installation Instruction

管帽和堵塞Caps and Plugs



牢牢握住接头本体，从手指拧紧的位置开始将堵塞紧固四分之一圈。
对于1/16,1/8和3/16in.;2,3　和4mm 的卡套管接头，将堵塞紧固八分之一圈。

While holding fitting body steady, tighten the plug one-quarter turn from the finger-tight position.For 1/16, 1/8, and 3/16 in.; 2, 3, and 4 mm tube fittings, tighten the plug one-eighth turn.For over 1 in./25 mm tube fittings, tighten the plug one-quarter turn.

孔口连接Port Connectors

请在连接卡套管转换接头端之前连接机械卡套端。
Connect the machined ferrule end before connecting the tube adapter end.

机械加工的卡套末端
The end of the ferrule in mechanical processing

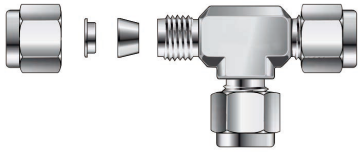

1.将螺母和卡套从端接处拆掉。扔掉卡套。
Machined Ferrule End
1. Remove the nut and ferrules from the end connection. Discard the ferrules.

2.滑动螺母将其拧紧到孔口连接的机械卡套端
对于大于1 in.125 mm 的尺寸：螺母要预装到孔口连接上。
2. Slip the nut over the machined ferrule end of the port connector. Over 1 in./25 mm sizes: The nut is preassembled on the port connector.

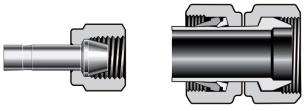

1 in./25 mm及以下尺寸

3.将孔口连接插入端接并用手指拧紧螺母。
3. Insert the port connector into the end connection and finger-tighten the nut.

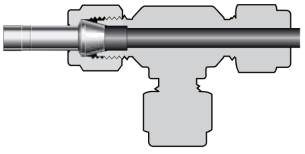

4. 牢牢固定接头本体，将螺母紧固1/4圈 对于1/16，1/8和3/16 in.;2,3和4mm 卡套管接头，装螺母紧固1/8圈。
4. While holding fitting body steady, tighten the nut one-quarter turn.For 1/16, 1/8, and 3/16 in.; 2, 3, and 4 mm tube fittings, tighten the nut one-eighth turn.

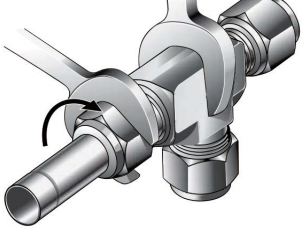

卡套管转换接头末端Tube Adapter End

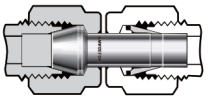

5.插入卡套管转换接头直到转换接头稳固地靠在卡套管接头本体的肩部上,用手拧紧螺母。
Insertthe tube adapter until it rests firmly on the shoulder ofthe Swagelok tube fitting body.
Finger-tighten the nut.
大于1in./25 mm 的尺寸：从端接处拆下螺母和卡套并扔掉，然后插入卡套管转换接头。
Over 1 in./25 mm sizes: Remove and discard the nut and ferrules from the end connection, then insert the tube adapter.

6.在6点钟的位置给螺母作标记。牢牢固定接头本体，将螺母紧固一又四分之一圈以停在9点钟的位置。
6. Mark the nut at the 6 o'clock position. While holding fitting body steady, tighten the nut one and one-quarter turns to the 9 o'clock position.

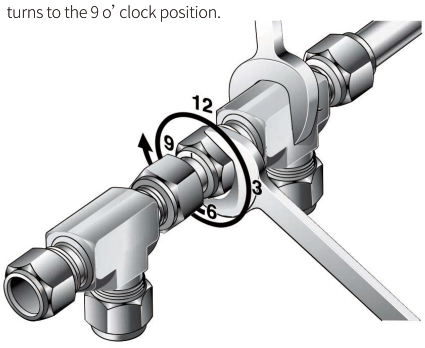

对于1/16,1/8和3/16 in.;2,3　和4mm 的卡套管接头，将螺母紧固四分之三圈以停在3点钟的位置。对于预装超过1 in./25mm的卡套管接头，将螺母拧紧1/2圈到12点钟的位置。
For 1/16, 1/8, and 3/16 in.; 2, 3, and 4 mm tube fittings, tighten the nut three-quarters turn to the 3 o'clock position. For preswaged over 1 in./25 mm and over tube fittings, tighten the nut one-half turn to the 12 o'clock position.

卡套直通

Union Connector



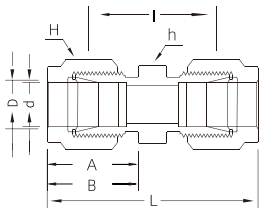

订购指南 Order Information

直接 Union

规格 Tube OD In	型号 Ordering Number	d Min (MM)	Width Across Flat h (inch)	Width Across Flat H (inch)	A (mm)	B (mm)	I (mm)	L (mm)	材质 Material
1/8"	SS-UC2	2.28	7/16	7/16	12.8	15.3	22.35	35.75	sus316L
1/4"	SS-UC4	4.8	1/2"	9/16	15	17.5	26.2	40.8	sus316L
3/8"	SS-UC6	7.1	5/8	11/16	16.7	19.2	30.2	45	sus316L
1/2"	SS-UC8	10.4	13/16	7/8	19.6	22.1	31	51.6	sus316L
3/4"	SS-UC12	15.7	1-1/16	1-1/8	19.5	22	33.3	53.9	sus316L
1"	SS-UC16	22.2	1-3/8	1-1/2	24	26.5	40.4	65.4	sus316L

英制 Inch

订购指南 Order Information

直接 Union

规格 Tube OD In	型号 Ordering Number	d Min (mm)	Width Across Flat h (mm)	Width Across Flat H (mm)	A (mm)	B (mm)	I (mm)	L (mm)	材质 Material
2	SS-MUC2	1.7	12.0	12.0	12.9	15.3	22.4	35.6	sus316L
4	SS-MUC4	3	12.0	12.0	14.5	17	26.2	39.8	sus316L
6	SS-MUC6	4.8	12	14.0	15.3	18.1	26.2	41.0	sus316L
8	SS-MUC8	6.4	14	16.0	16.2	19.2	28.2	43.6	sus316L
10	SS-MUC12	7.9	18.0	19.0	17.2	19.5	31.0	46.2	sus316L
12	SS-MUC16	9.5	20	22.0	19.3	22.0	31.0	51.2	sus316L

公制 Metric

变径卡套直接

Reducing Union



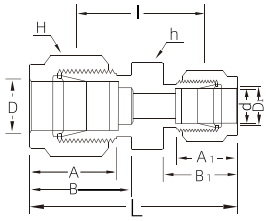

订购指南 Order Information

变径卡套直接 Reducing Union													
型号	Tube O.D.		d	Width Across Flat			A (mm)	A1 (mm)	B (mm)	B1 (mm)	I (mm)	L (mm)	材质
Ordering Number	D(inch) (In)	D1(inch) (In)	Min (mm)	h (inch)	H (inch)	H1 (inch)							Material
SS-RU4-2	1/4	1/8	2.28	1/2	9/16	7/16	15.24	12.70	17.78	15.3	25.40	38.6	sus316L
SS-RU6-2	3/8	1/8	2.28	5/8	11/16	7/16	16.76	12.70	19.30	15.24	26.92	41	sus316L
SS-RU6-4	3/8	1/4	4.82	5/8	11/16	9/16	16.76	15.24	19.30	17.78	28.44	43.1	sus316L
SS-RU8-2	1/2	1/8	2.28	13/16	7/8	7/16	19.6	12.70	21.84	15.24	28.44	44.6	sus316L
SS-RU8-4	1/2	1/4	4.82	13/16	7/8	9/16	19.6	15.24	21.84	17.78	29.46	47.1	sus316L
SS-RU8-6	1/2	3/8	7.11	13/16	7/8	11/16	19.6	16.76	21.84	19.30	30.98	48.7	sus316L
SS-RU12-4	3/4	1/4	4.82	1-1/16	1-1/8	9/16	19.5	15.24	21.84	17.78	31.75	49.3	sus316L
SS-RU12-6	3/4	3/8	7.11	1-1/16	1-1/8	11/16	19.5	16.76	21.84	19.30	33.27	50.9	sus316L
SS-RU12-8	3/4	1/2	10.41	1-1/16	1-1/8	7/8	19.5	22.86	21.84	21.84	33.27	53.8	sus316L
SS-RU16-8	1	1/2	10.41	1-3/8	1-1/2	7/8	24	22.86	26.41	21.84	39.50	60.9	sus316L
SS-RU16-12	1	3/4	15.74	1-3/8	1-1/2	1-1/8	24	24.38	26.41	21.84	39.00	61.2	sus316L

英制 Inch

订购指南 Order Information

变径卡套直接 Reducing Union													
型号	Tube O.D.		d	Width Across Flat			A (mm)	A1 (mm)	B (mm)	B1 (mm)	I (mm)	L (mm)	材质
Ordering Number	D (mm)	D1 (mm)	Min (mm)	h (mm)	H (mm)	H1 (mm)							Material
SS-MRU-6M-3M	6	3	2.4	12	14	12	15.3	12.9	18.1	15.9	24.6	38.6	sus316L
SS-MRU-6M-4M	6	4	2.4	12	14	12	15.3	14.5	18.1	17.5	25.4	39.4	sus316L
SS-MRU-8M-6M	8	6	4.8	14	16	14	16.2	15.3	19.2	18.1	27.4	42.3	sus316L
SS-MRU-10M-6M	10	6	4.8	17	19	14	17.2	15.3	20.2	18.1	29.5	44.5	sus316L
SS-MRU-10M-8M	10	8	6.4	17	19	16	17.2	16.2	19.5	19.2	30.0	45.1	sus316L
SS-MRU-12M-6M	12	6	4.8	22	22	14	22.8	15.3	22.0	19.5	29.5	47.0	sus316L
SS-MRU-12M-8M	12	8	6.4	22	22	16	22.8	16.2	22.0	19.5	30.2	47.8	sus316L
SS-MRU-12M-10M	12	10	7.9	22	22	19	22.8	17.2	22.0	19.5	31.0	48.7	sus316L
SS-MRU-16M-12M	16	12	9.5	24	25	22	24.4	22.8	22.0	22.0	31.8	52.0	sus316L

公制 Metric

外螺纹接头

Male Connectors



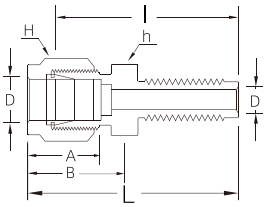

订购指南 Order Information

终端接头 Connects Tube To Male NPT

型号 Ordering Number	Tube O.D. D (mm)	T (NPT) In	d Min (mm)	Width Across Flat h (mm)	Width Across Flat H (mm)	A (mm)	B (mm)	I (mm)	L (mm)	材质 Material
SS-MC-3M ·2N	3	1/8	2.4	11.1	11.1	12.9	15.9	23.9	30.5	sus316L
SS-MC-3M-4N	3	1/4	2.4	14	12	12.9	15.3	29.0	35.6	sus316L
SS-MC-4M-2N	4	1/8	2.4	12	12	13.7	16.1	24.6	31.2	sus316L
SS-MC-4M-4N	4	1/4	2.4	14	12	13.7	16.1	29.7	36.3	sus316L
SS-MC-6M-2N	6	1/8	4.8	14	14	15.3	17.7	25.4	32.8	sus316L
SS-MC-6M-4N	6	1/4	4.8	14	14	15.3	17.7	30.5	37.9	sus316L
SS-MC-6M-6N	6	3/8	4.8	18	14	15.3	17.7	31.0	38.4	sus316L
SS-MC-6M-8N	6	1/2	4.8	22	14	15.3	17.7	37.3	44.7	sus316L
SS-MC-8M-2N	8	1/8	4.8	15	16	16.2	18.6	26.7	34.2	sus316L
SS-MC-8M-4N	8	1/4	6.4	15	16	16.2	18.6	31.2	38.7	sus316L
SS-MC-8M-6N	8	3/8	6.4	18	16	16.2	18.6	31.8	39.3	sus316L
SS-MC-8M-8N	8	1/2	6.4	22	16	16.2	18.6	38.1	45.6	sus316L
SS-MC-10M-2N	10	1/8	4.8	18	19	17.2	19.5	28.7	36.3	sus316L
SS-MC-10M-4N	10	1/4	7.9	18	19	17.2	19.5	33.3	40.9	sus316L
SS-MC-10M ·6N	10	3/8	7.9	18	19	17.2	19.5	33.3	40.9	sus316L
SS-MC-10M-8N	10	1/2	7.9	22	19	17.2	19.5	38.9	46.5	sus316L
SS-MC-12M-4N	12	1/4	7.9	22	22	22.8	22.0	33.3	43.4	sus316L
SS-MC-12M-6N	12	3/8	9.5	22	22	22.8	22.0	33.3	43.4	sus316L
SS-MC-12M-8N	12	1/2	9.5	22	22	22.8	22.0	38.9	49.0	sus316L
SS-MC-12M-12N	12	3/4	9.5	27	22	22.8	22.0	40.4	50.5	sus316L
SS-MC-16M-4N	16	1/4	7.9	24	25	24.4	22.0	34.0	44.1	sus316L
SS-MC-16M-6N	16	3/8	9.5	24	25	24.4	22.0	34.0	44.1	sus316L
SS-MC-16M-8N	16	1/2	11.9	24	25	24.4	22.0	38.9	49.0	sus316L
SS-MC-16M-12N	16	3/4	12.7	27	25	24.4	22.0	40.4	50.5	sus316L

内螺纹接头

Female Connectors



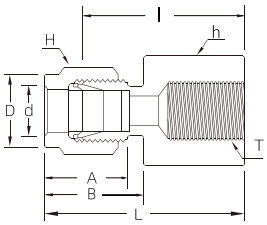

订购指南 Order Information

内螺纹接头 Female Connectors

型号	Tube O.D.	T	d	Width Across Flat		A (mm)	B (mm)	I (mm)	L (mm)	材质
Ordering Number	D (inch)	(NPT) In	Min (mm)	h (inch)	H (inch)					Material
SS-FC2-2N	1/8	1/8	2.28	9/16	7/16	12.70	15.24	22.09	28.70	sus316L
SS-FC2-4N	1/8	1/4	2.28	3/4	7/16	12.70	15.24	26.92	33.52	sus316L
SS-FC4-2N	1/4	1/8	4.82	9/16	9/16	15.24	17.78	23.87	31.24	sus316L
SS-FC4-4N	1/4	1/4	4.82	3/4	9/16	15.24	17.78	28.44	35.81	sus316L
SS-FC4-6N	1/4	3/8	4.82	7/8	9/16	15.24	17.78	30.22	37.59	sus316L
SS-FC4-8N	1/4	1/2	4.82	1-1/16	9/16	15.24	17.78	35.05	42.41	sus316L
SS-FC6-2N	3/8	1/8	7.11	5/8	11/16	16.76	19.30	25.40	32.76	sus316L
SS-FC6-4N	3/8	1/4	7.11	3/4	11/16	16.76	19.30	30.22	37.59	sus316L
SS-FC6-6N	3/8	3/8	7.11	7/8	11/16	16.76	19.30	31.75	39.11	sus316L
SS-FC6-8N	3/8	1/2	7.11	1-1/16	11/16	16.76	19.30	36.57	43.94	sus316L
SS-FC6-12N	3/8	3/4	7.11	1-5/16	11/16	16.76	19.30	40.38	47.75	sus316L
SS-FC8-4N	1/2	1/4	10.41	13/16	7/8	22.86	21.84	30.22	40.38	sus316L
SS-FC8-6N	1/2	3/8	10.41	7/8	7/8	22.86	21.84	31.75	41.91	sus316L
SS-FC8-8N	1/2	1/2	10.41	1-1/16	7/8	22.86	21.84	36.57	46.73	sus316L
SS-FC8-12N	1/2	3/4	10.41	1-5/16	7/8	22.86	21.84	38.10	48.26	sus316L
SS-FC10-6N	5/8	3/8	12.70	15/16	1	24.38	21.84	31.75	41.91	sus316L
SS-FC10-8N	5/8	1/2	12.70	1-1/16	1	24.38	21.84	36.57	46.73	sus316L
SS-FC12-8N	3/4	1/2	15.74	1-1/16	1-1/8	24.38	21.84	36.57	46.73	sus316L
SS-FC12-12N	3/4	3/4	15.74	1-5/16	1-1/8	24.38	21.84	38.10	48.26	sus316L
SS-FC16-12N	1	3/4	22.35	1-3/8	1-1/2	31.24	26.41	41.14	53.34	sus316L
SS-FC16-16N	1	1	22.35	1-5/8	1-1/2	31.24 a	26.41	50.03	62.23	sus316L

穿板直接

Bulkhead Union



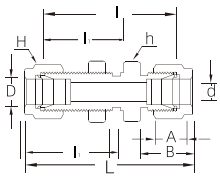

订购指南 Order Information

穿板直接 Bulkhead Union

型号	Tube O.D.	d	Width Across Flat		A (mm)	B (mm)	I (mm)	I1 (mm)	L (mm)	L1 (mm)	Pane Hole	Pane Max.	材质
Ordering Number	D(inch)	Min (mm)	h (inch)	H (inch)							Drll Size (mm)	Thickness (mm)	Material
SS-BU2	1/8	2.28	1/2	7/16	12.70	15.24	38.10	24.63	51.30	31.24	8.33	12.70	sus316L
SS-BU4	1/4	4.82	5/8	9/16	15.24	17.78	42.92	26.16	57.65	33.52	11.50	10.16	sus316L
SS-BU6	3/8	7.11	3/4	11/16	17	19.30	47.49	29.46	62.23	36.83	14.68	11.17	sus316L
SS-BU8	1/2	10.41	15/16	7/8	21.0	22.1	50.80	31.75	71.12	41.91	19.44	12.70	sus316L
SS-BU12	3/4	15.74	1-3/16	1-1/8	24.4	22	58.67	37.33	78.99	47.49	25.79	16.76	sus316L

英制 Inch

订购指南 Order Information

穿板直接 Bulkhead Union

型号	Tube O.D.	d	Width Across Flat		A (mm)	B (mm)	I (mm)	I1 (mm)	L (mm)	L1 (mm)	Pane Hole	Pane Max.	材质
Ordering Number	D(inch)	Min (mm)	h (inch)	H (inch)							Drll Size (mm)	Thickness (mm)	Material
SS-MBU4M	4	2.4	14	12	13.7	16.1	40.4	25.4	53.6	32.0	9.9	12.7	sus316L
SS-MBU6M	6	4.8	16	14	15.3	18.1	32.5	16.3	57.7	33.6	11.5	10.2	sus316L
SS-MBU8M	8	6.4	18	16	16.2	19.2	46.0	28.6	61.0	36.1	13.1	11.2	sus316L
SS-MBU10M	10	7.9	22	19	17.2	20.2	48.5	29.4	63.7	37.0	16.2	11.2	sus316L
SS-MBU12M	12	9.5	24	22	22.8	22.4	50.8	31.8	71.0	41.9	19.5	12.7	sus316L

公制 Metric

卡套弯头

Union Elbow



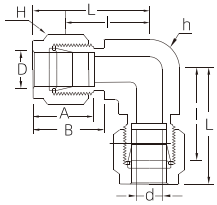

订购指南 Order Information									
卡套弯头 Union Elbow									
型号	Tube O.D.	d	Width Across Flat		A (mm)	B (mm)	I (mm)	L (mm)	材质
Ordering Number	D(inch)	Min (mm)	h (inch)	H (inch)					Material
SS-CFT2	1/8"	2.28	3/8	7/16	12.70	15.24	15.74	22.35	sus316L
SS-CFT4	1/4"	4.82	1/2	9/16	15.24	17.78	20.10	27.40	sus316L
SS-CFT6	3/8"	7.11	5/8	11/16	16.76	19.30	23.11	30.48	sus316L
SS-CFT8	1/2"	10.41	13/16	7/8	23	21.84	25.90	36.06	sus316L
SS-CFT12	3/4"	15.74	1-1/16	1-1/8	24.38	21.84	29.71	39.87	sus316L
SS-CFT16	1"	22.35	1-3/8	1-1/2	31.24	26.41	36.83	49.02	sus316L

英制 Inch

订购指南 Order Information									
卡套弯头 Union Elbow									
型号	Tube O.D.	d	Width Across Flat		A (mm)	B (mm)	I (mm)	L (mm)	材质
Ordering Number	D(inch)	Min (mm)	h (inch)	H (inch)					Material
SS-CMT2	2	1.7	9.5	12	12.9	15.3	15.7	22.3	sus316L
SS-CMT4	4	2.4	12.7	12	13.7	16.1	18.8	25.4	sus316L
SS-CMT6	6	4.8	12.7	14	15.3	17.7	19.6	27.0	sus316L
SS-CMT8	8	6.4	15.9	16	16.2	18.1	22.4	29.9	sus316L
SS-CMT10	10	7.9	17.5	19	17.2	19.2	21.3	31.5	sus316L
SS-CMT12	12	9.5	20.6	22	22.8	20.2	25.9	36.0	sus316L

公制 Metric

弯头卡套转NPT外螺纹

Connects Metric Tubes TO Male NPT



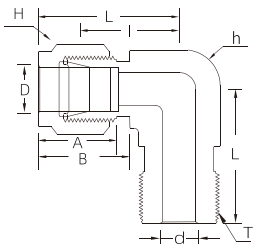

订购指南 Order Information

弯头卡套转NPT外螺纹 Connects Metric Tubes TO Male NPT

型号	管道 O.D.D	T	d	Width Across Flat		A	B	I	L	L1	材质
Ordering Number	(mm)	(NPT) In	Min (mm)	h (mm)	H (mm)	(mm)	(mm)	(mm)	(mm)	(mm)	Material
SS-KME-3M-2	3	1/8	2.4	12.7	12	12.9	15.3	17.0	23.6	17.8	sus316L
SS-KME-3M-4	3	1/4	2.4	12.7	12	12.9	15.3	18.0	24.6	23.4	sus316L
SS-KME-4M-2	4	1/8	2.4	12.7	12	13.7	16.1	18.8	25.4	18.8	sus316L
SS-KME-4M-4	4	1/4	2.4	12.7	12	13.7	16.1	18.8	25.4	23.4	sus316L
SS-KME-6M-2	6	1/8	4.8	12.7	14	15.3	17.7	19.6	27.0	18.8	sus316L
SS-KME-6M-4	6	1/4	4.8	12.7	14	15.3	17.7	19.6	27.0	23.4	sus316L
SS-KME-6M-6	6	3/8	4.8	15.9	14	15.3	17.7	22.4	29.8	26.2	sus316L
SS-KME-6M-8	6	1/2	4.8	20.6	14	15.3	17.7	24.4	31.8	33.0	sus316L
SS-KME-8M-2	8	1/8	4.8	14.3	16	16.2	18.6	21.3	28.8	19.8	sus316L
SS-KME-8M-4	8	1/4	6.4	14.3	16	16.2	18.6	21.3	28.8	24.4	sus316L
SS-KME-8M-6	8	3/8	6.4	15.9	16	16.2	18.6	23.1	30.6	26.2	sus316L
SS-KME-8M-8	8	1/2	6.4	20.6	16	16.2	18.6	25.1	32.6	33.0	sus316L
SS-KME-10M-2	10	1/8	4.8	17.5	19	17.2	19.5	23.9	31.5	21.6	sus316L
SS-KME-10M-4	10	1/4	7.1	17.5	19	17.2	19.5	23.9	31.5	26.2	sus316L
SS-KME-10M-6	10	3/8	7.9	17.5	19	17.2	19.5	23.9	31.5	26.2	sus316L
SS-KME-10M-8	10	1/2	7.9	20.6	19	17.2	19.5	25.9	33.5	33.0	sus316L
SS-KME-12M-4	12	1/4	7.1	20.6	22	22.8	22.0	25.9	36.0	28.2	sus316L
SS-KME-12M-6	12	3/8	9.5	20.6	22	22.8	22.0	25.9	36.0	28.2	sus316L
SS-KME-12M-8	12	1/2	9.5	20.6	22	22.8	22.0	25.9	36.0	33.0	sus316L
SS-KME-12M-12	12	3/4	9.5	27.0	22	22.8	22.0	29.7	39.8	36.8	sus316L

管转卡套接头/ 三通/旁路NPT内螺纹

Reduces/Female Branch Tee-NPT Thread



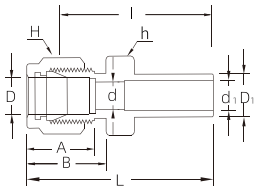

订购指南 Order Information

管转卡套接头 Reduces

型号	Tube O.D.		d	d1	Width Across Flat		A (mm)	B (mm)	l (mm)	L (mm)	材质
Ordering Number	D(mm)	D1(inch)	Min (mm)	Min (mm)	h (inch)	H (inch)					Material
SS-KR-3M-2	3	1/8	2.4	2.1	11.1	11.1	12.9	15.3	26.9	33.5	sus316L
SS-KR-3M-4	3	1/4	2.4	4.4	12	12	12.9	15.3	29.5	36.1	sus316L
SS-KR-6M-4	6	1/4	4.8	4.4	14	14	14.6	17.7	31.8	39.2	sus316L
SS-KR-6M-5	6	5/16	4.8	5.6	14	14	14.6	17.7	32.5	39.9	sus316L
SS-KR-6M-6	6	3/8	4.8	6.9	14	14	14.6	17.7	333	40.7	sus316L
SS-KR-6M-8	6	1/2	4.8	9.4	14	14	14.6	17.7	38.9	46.3	sus316L
SS-KR-8M-6	8	3/8	6.4	6.9	15	16	16.2	18.6	35	42	sus316L
SS-KR-8M-8	8	1/2	6.4	9.4	15	16	16.2	18.6	40.1	47.6	sus316L
SS-KR-10M-6	10	3/8	7.9	6.9	18	19	17.2	19.5	36.6	44.2	sus316L
SS-KR-10M-8	10	1/2	7.9	9.4	18	19	17.2	19.5	42.2	49.8	sus316L
SS-KR-12M-8	12	1/2	9.5	9.4	22	22	22.8	22.0	42.2	52.3	sus316L
SS-KR-12M-12	12	3/4	9.5	14.8	22	22	22.8	22.0	43.7	53.8	sus316L



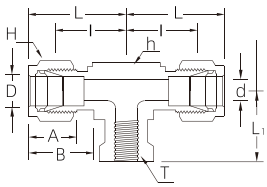

订购指南 Order Information

三通/旁路NPT内螺纹 Female Branch Tee-NPT Thread

型号	Tube O.D	T	d	Width Across Flat		A (mm)	B (mm)	l (mm)	L (mm)	L1 (mm)	材质
Ordering Number	D(inch)	(NPT) In	Min (MM)	h (inch)	H (inch)						Material
SS-FBT-2-2N	1/8	1/8	2.28	1/2	7/16	12.70	15.24	18.03	24.63	19.05	sus316L
SS-FBT-4-2N	1/4	1/8	4.82	1/2	9/16	15.24	17.78	19.55	26.92	19.05	sus316L
SS-FBT-4-4N	1/4	1/4	4.82	11/16	9/16	15.24	17.78	22.35	29.71	22.35	sus316L
SS-FBT-6-4N	3/8	1/4	7.11	11/16	11/16	16.76	19.30	23.87	31.24	22.35	sus316L
SS-FBT-6-6N	3/8	3/8	7.11	11/16	11/16	16.76	19.30	25.90	33.27	22.35	sus316L
SS-FBT-6-8N	3/8	1/2	10.41	1	11/16	16.76	19.30	28.70	36.07	28.45	sus316L
SS-FBT-8-4N	1/2	1/4	10.41	13/16	7/8	22.86	21.84	25.90	36.06	22.35	sus316L
SS-FBT-8-6N	1/2	3/8	10.41	13/16	7/8	22.86	21.84	25.90	36.06	22.35	sus316L
SS-FBT-8-8N	1/2	1/2	10.41	1	7/8	22.86	21.84	28.70	38.86	28.44	sus316L
SS-FBT-10-8N	5/8	1/2	12.70	1	1	24.38	21.84	28.70	38.86	28.44	sus316L
SS-FBT-12-12N	3/4	3/4	15.74	1-3/8	1-1/8	24.38	21.84	34.54	44.70	31.75	sus316L
SS-FBT-16-12N	1	3/4	22.35	1-3/8	1-1/2	31.24	26.41	36.83	49.02	31.75	sus316L
SS-FBT-16-16N	1	1	22.35	1-11/16	1-1/2	31.24	26.41	41.40	53.59	38.10	sus316L

三通/旁路NPT 外螺纹/变径卡套三通

Male Branch Tee-NPT Thread/Reducing Union Tee



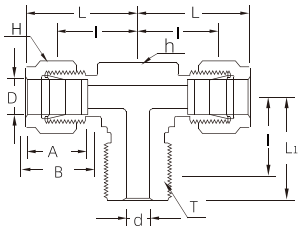

订购指南 Order Information

三通/旁路NPT外螺纹 Male Branch Tee-NPT Thread

型号	Tube O.D	T	d	Width Across Flat		A (mm)	B (mm)	I (mm)	L (mm)	L1 (mm)	材质
Ordering Number	D(inch)	(NPT) In	Min (MM)	h (inch)	H (inch)						Material
SS-MBT-2-2N	1/8	1/8	2.28	1/2	7/16	12.70	15.24	18.30	24.91	18.90	sus316L
SS-MBT-2-4N	1/8	1/4	2.28	1/2	7/16	12.70	15.24	18.03	24.63	23.36	sus316L
SS-MBT-3-2N	3/16	1/8	3.04	1/2	1/2	13.71	16.00	17.78	25.40	1870	sus316L
SS-MBT-4-2N	1/4	1/8	4.82	1/2	9/16	15.24	17.78	19.55	26.92	18.79	sus316L
SS-MBT-4-4N	1/4	1/4	4.82	1/2	9/16	15.24	17.78	19.55	26.92	23.36	sus316L
SS-MBT-5-2N	5/16	1/8	4.82	5/8	5/8	16.25	18.54	22.35	29.71	20.82	sus316L
SS-MBT-6-4N	3/8	1/4	7.11	5/8	11/16	16.76	19.30	23.11	30.48	25.40	sus316L
SS-MBT-6-6N	3/8	3/8	7.11	5/8	11/16	16.76	19.30	23.10	30.48	28.19	sus316L
SS-MBT-8-6N	1/2	3/8	966	13/16	7/8	22.86	21.84	25.90	36.06	28.19	sus316L
SS-MBT-8-8N	1/2	1/2	10.41	13/16	7/8	22.86	21.84	2590	36.06	33.02	sus316L
SS-MBT-10-8N	5/8	1/2	11.93	1	1	24.38	21.84	28.70	38.86	35.81	sus316L
SS-MBT-12-12N	3/4	3/4	15.74	1-1/16	1-1/8	24.38	21.84	29.71	39.87	36.83	sus316L



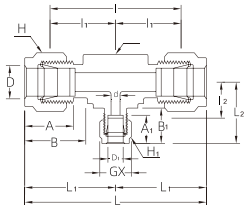

订购指南 Order Information

变径卡套三通Reducing Union Tee

型号	Tube O.D		d	Width Across Flat			A (mm)	A1 (mm)	B (mm)	B1 (mm)	I (mm)	I1 (mm)	I2 (mm)	L (mm)	L1 (mm)	L2 (mm)	材质
Ordering Number	D (inch)	D1 (inch)	Min (mm)	h (inch)	H (inch)	H (inch)											Material
SS-RUT6-4	3/8	1/4	4.82	5/8	11/16	9/16	16.76	15.24	19.30	17.78	46.22	23.11	21.59	60.96	30.48	28.95	sus316L
SS-RUT8-4	1/2	1/4	4.82	13/16	7/8	9/16	22.86	15.24	21.84	17.78	51.81	25.90	24.38	72.13	36.06	31.75	sus316L
SS-RUT8-6	1/2	3/8	7.11	13/16	7/8	11/16	22.86	16.76	21.84	19.30	51.81	25.90	25.90	72.13	36.06	33.27	sus316L
SS-RUT12-6	3/4	3/8	7.11	1 1/16	1 1/8	11/16	24.38	16.76	21.84	19.30	59.43	29.71	29.71	79.75	39.87	37.08	sus316L
SS-RUT12-8	3/4	1/2	10.41	1 1/16	1 1/8	7/8	24.38	22.86	21.84	21.84	59.43	29.71	29.71	79.75	39.87	39.87	sus316L
SS-RUT16-6	1	3/8	7.11	1 3/8	1 1/2	1 1/16	31.24	16.76	26.41	19.30	73.66	36.83	34.54	98.04	49.02	41.91	sus316L
SS-RUT16-8	1	1/2	10.41	1 3/8	1 1/2	7/8	31.24	21.84	26.41	22.86	73.66	36.83	34.54	98.04	49.02	44.70	sus316L
SS-RUT16-12	1	3/4	15.74	1 3/8	1 1/2	1 1/8	31.24	24.38	26.41	21.84	73.66	36.83	34.54	98.04	49.02	44.70	sus316L

球阀

Ball valve



特点 Features

- ◆顶部加载设计，允许填料在线调节Top-loaded Design AllowsPacking Adjustment with the Valve In-line
- ◆密封填料Seal Packing：PTFE,PCTFE
- ◆最大工作压力 Pressures Up To：3000psig
- ◆温度 Temperature :-53 - 148 C
- ◆面板安装 Panel Mounting
- ◆各种端接类型 Variety of end connections

内部结构 Internal Structure

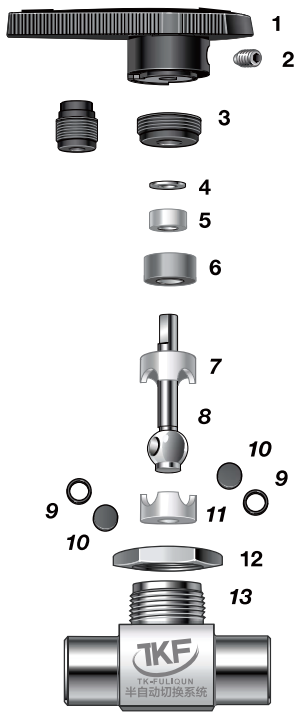

球阀材料结表 Materials of Construction	
元件Component	阀体材料Body Materials
	316SS
1 手柄Hangle	带有不锈钢插入件的尼龙Nylon
2 固定螺钉Set screw	SS/A564
3 填料螺栓Packing bolt	粉末金属316 SS powdered metal
	或Or 316 SS/A276, A479
4 上部压盖 Upper gland	316 SS/A240
5 衬套 Bushing	PTFE/D1710
6 下部压盖lower gand	粉末金属316 SS powdered metal
7 上部填料Upper gland	PTFE/D1710
8 球形阀杆ball stem	316 SS/A276
9 侧环 Side rings	涂碳氟粉末金属316SS/B525(fluorocabon coating
10 侧盘Side discs	
11 下部填料Upper packing	PTFE/D1710
12 面板螺母Panel Screw	粉末金属SS/316SS powdered metal
	B783
13 阀体Body	316 SS/
	A276, A479

安装尺寸图 Dimensions

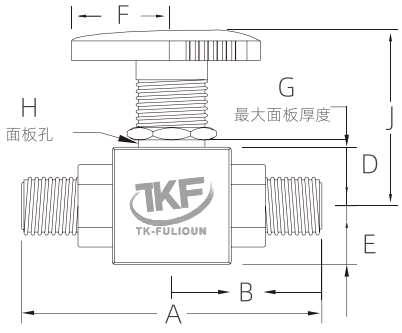

订购指南 Order Information										
规格	型号	尺寸size in(mm)								材质
Tube O.D. D(inch)	Ordering Number	A	B	D	E	F	G	H	J	Material
1/4	SS-BV10-TF4	2.39(60.7)	1.20(30.5)	0.44(11.2)	0.38(9.7)	1.53(38.9)	3/16(4.8)	25/32(19.8)	1.47(37.3)	sus316L
3/8	SS-BV10-TF6	3.05(77.5)	1.52(38.6)	0.56(14.2)		2.00(50.8)	3/8(9.5)	11/8(28.6)	2.07(52.6)	sus316L
1/2	SS-BV10-TF8	3.92(99.6)	1.96(49.8)	0.69 (17.5)		3.00(76.2)	3/8(9.5)	11/2(38.1)	2.43(61.7)	sus316L
3/4"	SS-BV10-TF12	3.92(99.6)	1.96(49.8)	0.69 (17.5)		3.00(76.2)	3/8(9.5)	11/2(38.1)	2.43(61.7)	sus316L
1"	SS-BV10-TF16	3.92(99.6)	1.96(49.8)	0.69(17.5)		3.00(76.2)	3/8(9.5)	11/2(38.1)	2.43(61.7)	sus316L

备注：如选择压力 低压 (L) :0-1000Psi 高压 (H) :0-3000Psi
Note: if pressure selected Low pressure (L): 0-1000 Psi; High pressure (H): 0-3000si.

针型阀

Needle valve



特点 Features

◆设计紧凑 Compact Design
◆密封材料Seal Packing：PFA ,PCTFE
◆最大工作压力 Pressures Up To：5000psig
◆温度 Temperature Rate：-53-232C
◆流量系数 Flow Coefficients(Cv):0.09-1.80
◆面板安装Panel Mounting
◆各种端接类型 Variety of end connections

球阀材料结表 Materials of Construction

组件 Components	阀体材料 Body Materials 材料等级/ASTM规范 Materials Grade/ASTM Specification		
1a 条形手柄 Bar handle 手柄销Handle pin 固定螺钉Set screw	阳极氧化铝Anodized aluminum2024/B221或A209		
	SS/A108		
	涂镉镍钢Cadmium plated nickel steel		
1b 圆形手柄Round Knob 固定螺钉Set screw	带有黄铜插入件的酚醛塑料phenolic with brass insert		
	涂镉镍钢 Cadmium plated nickel steel		
1c 球形手柄 Knob handle 固定螺钉Set screw	阳极氧化铝Anodized aluminum 7129/B221		
	涂镉镍钢Cadmium plated nickel steel		
1d 条形手柄把人Bar 手柄销Handle pin 固定螺钉Set screw	316 SS/A276		
	S17400/A564		
2 填 料 螺 母Packing nut	316 SS/A276	12L14/A108	合金Alloy 400/B164
3 压 盖gland	304 SS/A240,A167		
4 填 料 弹 簧 Packing springs	S17700/A693		
5 填 料 压 盖Packing gland	316 SS/A240,A276,B783		
6 上 部 填 料Upper packing	PFA/D3307		
7 下 部 填 料Lower packing			
8 下 部 压 盖Lower gland	316 SS/A240		合金Alloy 400/B127
9a调节阀杆regulating stem	镀铬③Chrome-plated 316 SS/A276		合金Alloy R400/B164
9b V型阀杆Vee stem			
9c软座阀杆Soft-seat			
阀杆头stem tip	PCTFE/D1430		
10面板螺母Panel Nut	316 Ss		316 Ss
11a阀体Body	316 SS/A182	镀铬Chrome-plated 11L17/A108	合金Alloy R400/B564
润滑剂Lubricant	二硫化钨和碳氟化合物基底Tungsten disulfide and fluorocarbon based		

内部结构 Internal Structure

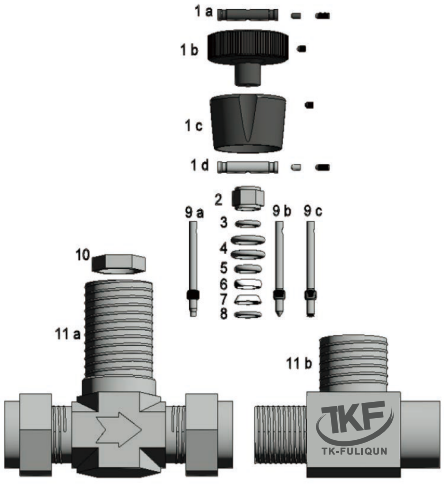

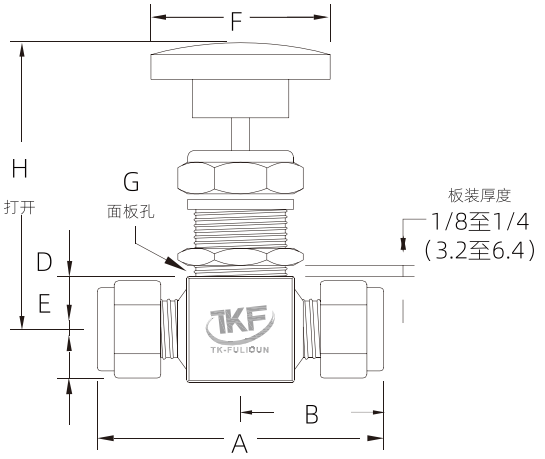

安装尺寸图 Dimensions

订购指南 Order Information

规格	型号	尺寸size in(mm)							材质
Tube O.D. D(inch)	Ordering Number	A	B	D	E	F	G	H	Material
1/4	SS-NV10-TF4	2.27(57.6)	1.13(28.7)	0.44(11.2)	0.38(9.7)	1.38(35.1)	0.53(13.5)	2.50(63.5)	sus316L
3/8	SS-NV10-TF6	2.58(65.5)	1.29 (32.8)	0.55(14.0)	0.50(12.7)	1.88(47.8)	0.78(19.8)	2.97(75.4)	sus316L
1/2	SS-NV10-TF8	3.80(96.5)	1.90 (48.3)	0.75(19.1)		3.00(76.2)	1.03(26.2)	3.91(99.3)	sus316L
3/4”	SS-NV10-TF12	3.80(96.5)	1.90 (48.3)	0.75(19.1)		3.00(76.2)"	1.03(26.2)	3.91(99.3)	sus316L

备注：如选择压力 低压（L）：0-1000Psi 高压（H）：0-3000Psi
Note: if pressure selected Low pressure (L): 0-1000 Psi; High pressure (H): 0-3000si.

单向阀
Check valve



特点 Features

◆工作压力达3000 psig (206 bar)The working pressure reaches 3000 psig (206 bar).
◆可调节和固定的开启压力Adjustable and fixed opening pressure
◆进出气形式可以选择VCR/卡套接头Connection can be selected as VCR/NPT or tube fitting
◆ 316不锈钢316stainless steel

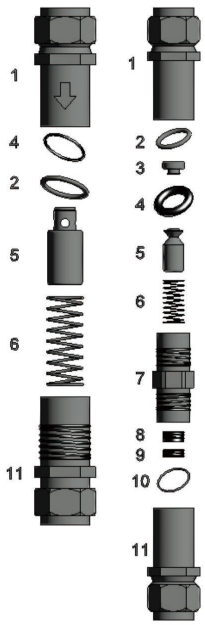

安装尺寸图 Dimensions

材料结表 Materials of Construction

元件 Component	阀体材料 Valve body materials 316 Ss 材料等级/ASTM规范 Material grade/ASTM specification
1入口阀体 Inlet body	316 SS/A479
2入口垫圈 Inlet gasket	PTFE涂层coated316 SS/A240
入口垫圈(使用>或≥50 psi [3.5 bar]弹簧的6C和8C系列的标准配置;2C和4C系列以及所有其它6C和8C系列的可选配置)Inlet gasket (use > or 6C|spring ≥50 psi[3.5 bar] With the standard configuration of 8C series;2C And 4C series and all other 6(and optional configurations of the 8C series)	
入口垫圈(12C和16C系列)Inlet gasket (12C and 16Cseries)	PTFE涂层coated316 SS/A240
3插入件 Inserts	316 SS/A479
4 0 形 圈 O-ring	碳氟FKM
5提动头 Poppet	316 SS/A479
6弹簧 springs	302 SS/A313
7中心阀体 Centerbody	316 SS/A479
8调节螺丝 adjusting screws	316 SS/A276
9锁定螺丝 Locking Screws	316 SS/A276
10出口垫圈 Outlet gaske	PTFE涂层coated316 SS/A240
11出口阀体 Outlet body	316 SS/A479
浸湿的润滑剂 Wet lubricant	硅酮基PTFE基Silicone-based and molybdenum dissuifide-based

内部结构 Internal Structure

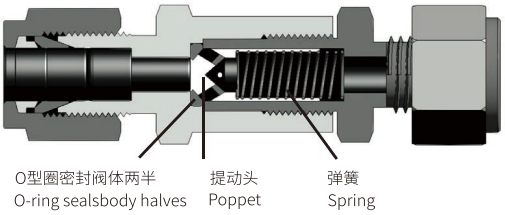

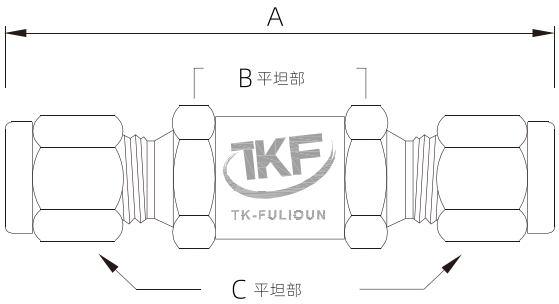

安装尺寸图 Dimensions

订购指南 Order Information

端接		型号	流量系数	尺寸size in(mm)			材质
Connection		Ordering Number	Flow Coefficient	A	B	C	Body Material
卡套接头 Tube Fitting	1/4 in.	SS-CV4	Cv=0.3	2.35(59.7)	5/8	9/16	sus316L
	3/8 in.	SS-CV6	Cv=0.3	3.17(80.5)	7/8	11/16	sus316L
	1/2 in.	SS-CV8	Cv=0.3	3.425(86.9)	7/8	7/8	sus316L
外螺纹 VCR接头 Male VCR	1/4 in.	SS-MVCR4	Cv=0.3	2.21(56.1)	5/8		sus316L
	3/8 in.	SS-MVCR6	Cv=0.3	3.56(90.4)	15/16		sus316L
	1/2 in.	SS-MVCR8	Cv=0.3	3.56(90.4)	15/8		sus316L

过滤器

filter



特点 Features

◆直通型过滤器可用在空间受限的地方 Inline Filters are for use where space is limited
◆可更换的烧结式和滤网式过滤元件根据孔径选择 Replaceable sintered or strainer elements are avaliable in a choice of pore sizes
◆工作压力 Working Pressure：4000psig
◆温度 Temperature:400°C
◆各种端接类型 Variety of end connections

材料结表 Materials of Construction		
组件 Compoent	过滤器本体材料Valve Body Materials	
	材料等级/ASTM规范Material Grade/ASTM Specification	
阀帽螺母Nut	316SS/A479	
阀帽Cat	316SS/A479	
支承网(2)Support filter	316SS	
元件Components	尺寸Size:0.5 μm-316L SS	
	尺寸Size:2,7和15μm-316SS	
	烧结式sintered-316 SS	
	滤网式strainer—316SS	
弹簧Spring	302 SS	
垫片Gasket	镀银silvering 316 SS/A240	
阀体Body	316SS/A479	
支承环Support Ring	PH 15-7 Mo Ss	
润滑剂Lubricant	硅酮基silonyl	

内部结构 Internal Structure

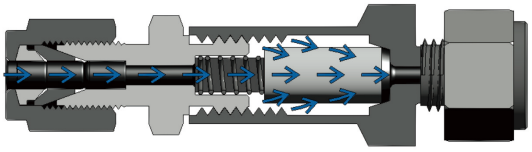

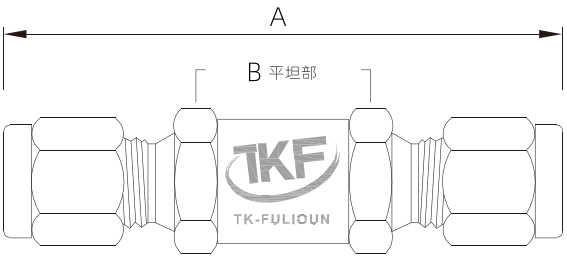

安装尺寸图 Dimensions

订购指南 Order Information					
端接		型号	尺寸size in(mm)		材质
Connection	尺寸	Ordering Number	A	B	Body Material
卡套接头 Tube Fitting	1/4 in.	SS-CV10-NT4	2.35(59.7)	5/8	sus316L
	3/8 in.	SS-CV10-NT6	3.17(80.5)	7/8	sus316L
	1/2 in.	SS-CV11-NT8	3.425(86.9)	7/8	sus316L
外螺纹 NPT Male NPT	1/4 in.	SS-CV11-TF4	2.21(56.1)	5/8	sus316L
	3/8 in.	SS-CV11-TF6	3.56(90.4)	15/16	sus316L
	1/2 in.	SS-CV11-TF8	3.56(90.4)	15/8	sus316L

阻火器
Fire Arrester



特点 Features

◆用于低压管路，防止低压管路的回火到达高压管路 Used in low-pressure piping to prevent flashback from low-pressure piping from reaching high-pressure pi
◆可选择带逆止功能 Optional with checkvalve
◆进出气形式可选择VCR/NPT螺纹/卡套接头 Connection can be selected as VCR/NPT or tube fittings.

技术参数 Specfications

◆工作压力Max. 10 bar: Working pressure Max. 10 bar
◆O 型圈Vitono°(FKM)：o-ring Vitono°(FKM)
◆泄漏率10-8mbarl/s He：Leak rate 10-8mbarl/s He
◆进出气连接：详见订购指南：Inlet and outlet connections: Refer to the ordering guide for details.

内部结构
Internal Structure

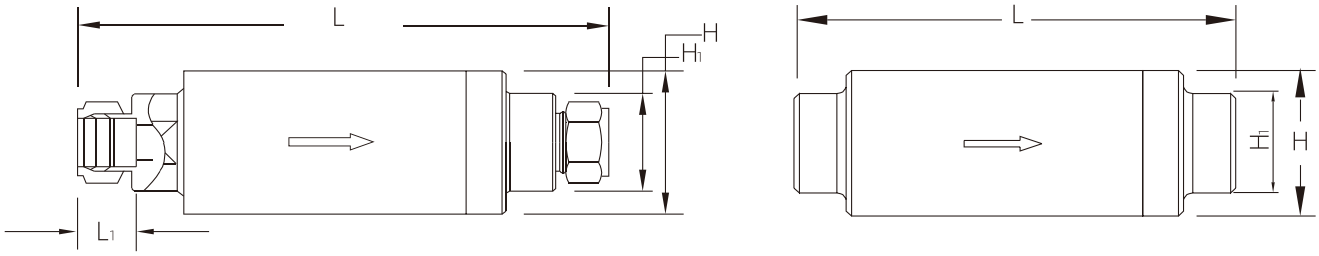

订购指南 Order Information							
	端口连接						
型号	进气/出气	规格	尺寸 size		in(mm)		材质
Ordering Number	Connection	Size	L	L1	H	H1	Material
FA1-04	M-VCR	1/4"	108	14.8	Φ27	Φ20	sus316L
FA1-06		3/8"	114	15.9	Φ27	Φ20	sus316L
FA1-08		1/2"	120	22.6	Φ27	Φ20	sus316L
FA2-04	卡套接头 Tube Fitting	1/4"	112	14.8	Φ27	Φ20	sus316L
FA2-06		3/8"	116	15.9	Φ27	Φ20	sus316L
FA2-08		1/2"	122	22.6	Φ27	Φ20	sus316L

高纯系列

High purity series

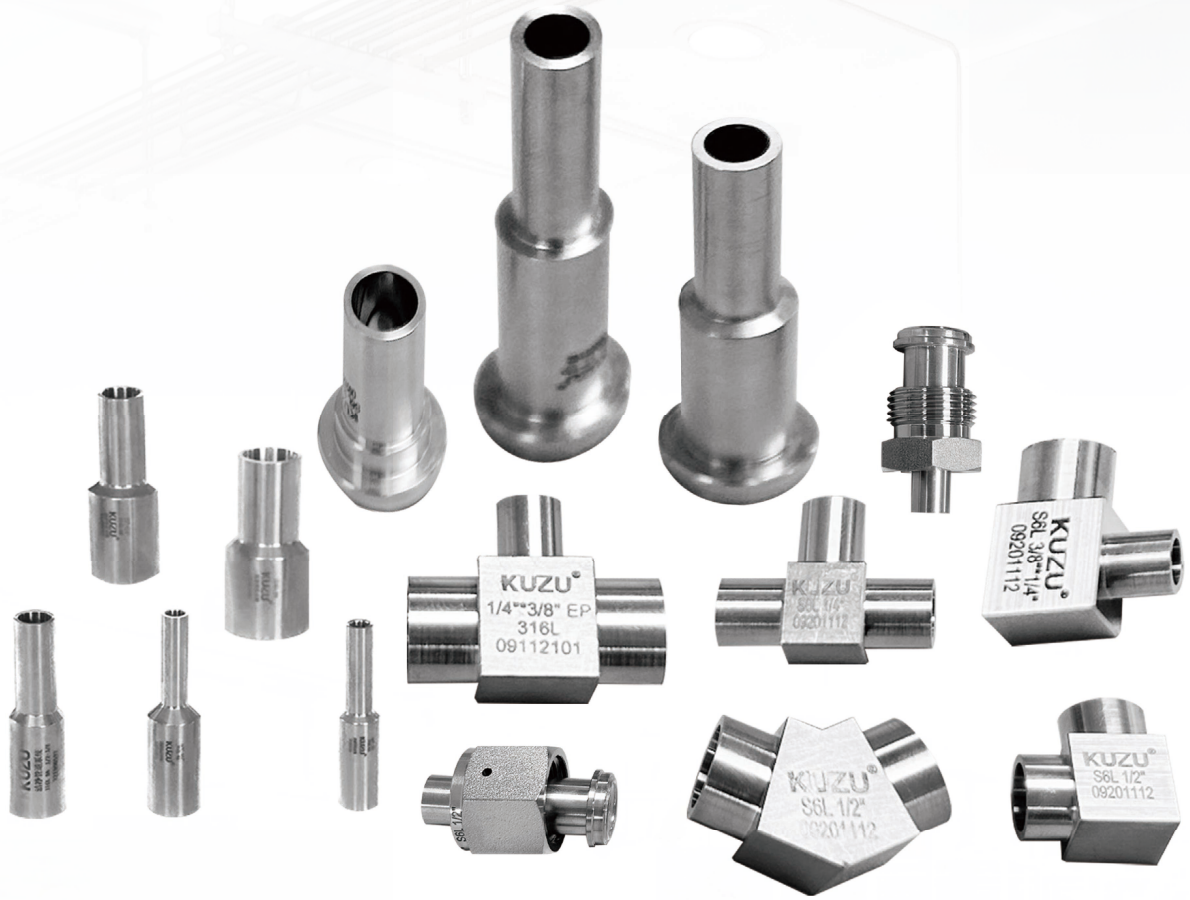

高纯系列

High purity series



微型弯头
Micro Elbow



微型弯头变径
Reducing Micro Elbow



菱形三通
Rhombic Tee



微型45°C弯头
Micro 45°C Elbow



微型三通
Micro tee



微型变径三通
Micro Reducing Tee



微型焊接大小头
Micro Reducing



VCR公头
MALE NUT



VCR母头
FEMALE NUT



垫片
GASKET



堵头
CAP



堵头
PLUG



VCR 接头
Gland(S)



VCR 接头
Gland(L)

高纯系列

High purity series

VCR连接操作步骤
VCR connection operation steps

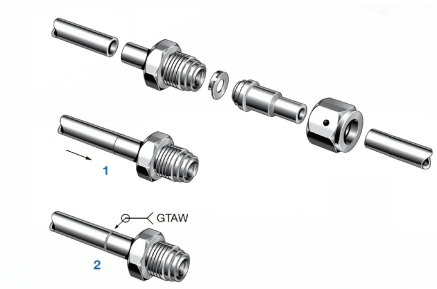

步骤1



步骤2

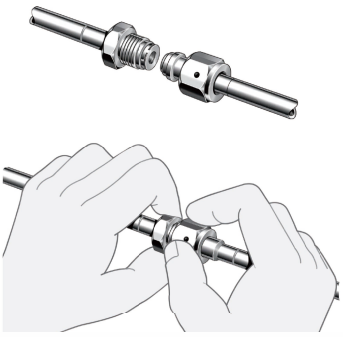

步骤3

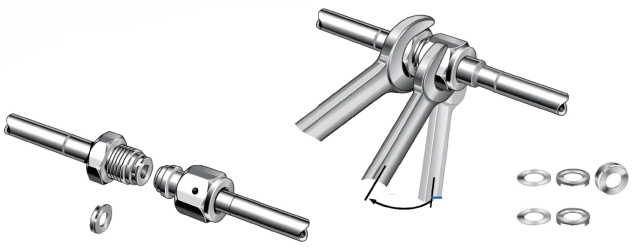

步骤4



步骤5

高纯接头系列

High Purity Fitting Series

特征 Features

VCR 接头具有高纯的金属对金属密封，从而可在真空至正压范围内提供无泄漏服务。
在外螺纹螺母或接头本体六角与内螺纹螺母接合期间，当垫片被两边的凸缘压紧时，VCR 组件上的密封即可完成。

VCR fitings offer thehigh purity of a metal-to-metalseal,providing leak-tight service from vacuum to positive pressure.The seal on a VCR assembly is made when the gasket is compressed bytwo beads during the engagement of a malenut or body hex and a female nut.

便于安装且具有最小拆卸间隙的侧载支承垫片
Side-load retainer gasket for easy installation and minimal clearance for removal

两个部位上的测试端口,便于漏泄测试
Test port attwo locations for easy leak testing

标记标明了制造厂材料，在适用的情况下，还会标上超高纯工艺规范(SC-01), MS-06-61 规定的适当工艺代号
Markings identify manufacturer,material,and when applicable,the appropriate processdesignator,in accordance with Ultrahigh-Purity Process Specification(SC-01),(MS-06-61)

接管和接头本体上标准表面抛光的平均粗糙度10 μin. (0.25 μm)Ra
Standard surface finish on glands and bodies is a roughnessaverage of 10 pin.(0.25 μm)Ra

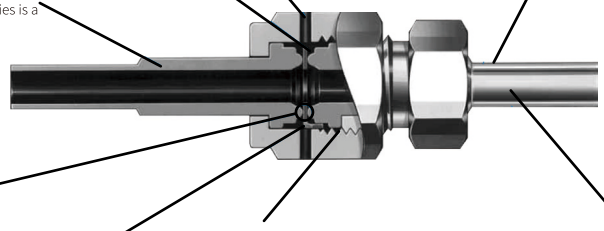

无“有效泄漏”区
No“virtual leak”zones

精密制造的垫片，能获得最高性能
Precision manufactured gasket for maximum performance

内螺纹已镀银以防止磨损
保证装配和构造上的一致性
Female threads are silver plated to prevent galling,ensure easy, consistent assembly

材料炉号已印在接管所有型材上，以确保原材料的可追踪性
Material heat code is stamped on glands and all shapes to ensure raw material traceability

结构材料

材料Material	代号Dssignator	规范Specification
接管，本体和螺母 Glands,Bodies,and Nuts		
316不锈钢 316 stainless steel	SS	棒材 Bar stock: ASME SA479 ASTM A276 锻体形状 Foned shape: ASME SA182 ASTM A314
316不锈钢 316 stainless steel	316L	棒材 Bar stock: ASME SA479 ASTM A276 锻体形状 Foned shape: ASME SA182 ASTM A314
316L VAR不锈钢 316L VARstainless steel	6LV	SEMI F20-0305高纯① SRPEO
垫片 Gaskets		
镍 Nickel	NI	ASTM F3
316不锈钢 316 stainless steel	SS	ASTM A240

高纯接头系列

High Purity Fitting Series



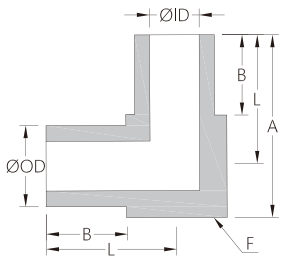

订购指南 Order Information

微型弯头 Micro Elbow

规格	型号	尺寸							材质
Tube OD In	Ordering Number	OD (mm)	ID (mm)	A (mm)	B (mm)	L (mm)	F (mm)	T (mm)	Material
1/4"	SS-ME4-X-T	6.35	4.35	14.29	6.35	10.32	7.94	1.0(0.89)	sus316L
3/8"	SS-ME6-X-T	9.53	7.53	17.46	6.35	11.91	11.11	1.0(0.89)	sus316L
1/2"	SS-ME8-X-T	12.7	10.22	20.64	6.35	13.50	14.29	1.0(0.89)	sus316L
3/4"	SS-ME12-X-T	19.05	15.75	27	6.35	16.68	20.65	1.65(1.24)	sus316L

备注：如选择洁净等级 示例：SS-ME4-X-T
X：代表选择洁净(表面处理)等级 21代表EP 20代表BA T:代表选择管壁厚

Note: To Order Tubing For Opinal Surface Finishes , Example: KUZU-LE4-X-L
X-Surface Finishes, Use 21 For EP (Electropolished and Specially Cleaned to Meet UHP Syetem Requirements), Use 20 For BA
T- Tube Wall Thickness



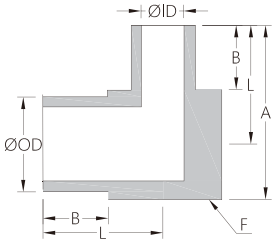

订购指南 Order Information

微型变径弯头 Micro Reducing Elbow

规格	型号	尺寸							材质
Tube OD In	Ordering Number	OD OD1	ID ID1	A (mm)	B (mm)	L (mm)	F (mm)	T (mm)	Material
3/8"-1/4"	SS-RME6-4-X-T	9.53	7.53	17.46	6.35	11.91	11.11	1.0(0.89)	sus316L
1/2"-1/4"	SS-RME8-4-X-T	12.7	10.22	20.64	6.35	13.50	14.29	1.24(1.0)&1.0(0.89)	sus316L
1/2"-3/8"	SS-RME8-6-X-T	12.7	10.22	20.64	6.35	13.50	14.29	1.24(1.0)&1.0(0.89)	sus316L

备注：如选择洁净等级 示例：SS-ME4-X-T
X：代表选择洁净(表面处理)等级 21代表EP 20代表BA T:代表选择管壁厚

Note: To Order Tubing For Opinal Surface Finishes , Example: Kuzu-ME4-X-T
X-Surface Finishes, Use 21 For EP (Electropolished and Specially Cleaned to Meet UHP Syetem Requirements), Use 20 For BA
T- Tube Wall Thickness

高纯接头系列

High Purity Fitting Series

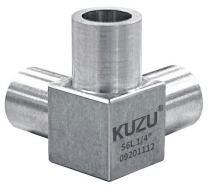

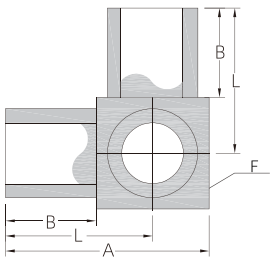

订购指南 Order Information

菱形三通 Rhombic Tee

规格	型号	尺寸							材质
Tube OD In	Ordering Number	OD (mm)	ID (mm)	A (mm)	B (mm)	L (mm)	F (mm)	T (mm)	Material
1/4"	SS-RT4-X-T	6.35	4.35	14.29	6.35	10.32	7.94	1.0(0.89)	sus316L
3/8"	SS-RT6-X-T	9.53	7.53	17.46	6.35	11.91	11.11	1.0(0.89)	sus316L
1/2"	SS-RT8-X-T	12.7	10.22	20.64	6.35	13.50	14.29	1.24(1.0)	sus316L

备注:如选择洁净等级 示例:SS-RT4-X-T
X:代表选择洁净(表面处理)等级 21代表EP 20代表BA T:代表选择管壁厚

Note: To Order Tubing For Opinal Surface Finishes , Example: Kuzu-RT4-X-T
X-Surface Finishes, Use 21 For EP (Electropolished and Specially Cleaned to Meet UHP Syetem Requirements), Use 20 For BA
T- Tube Wall Thickness



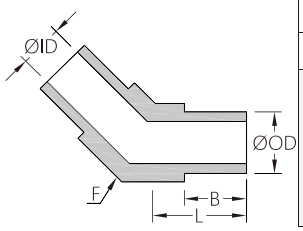

订购指南 Order Information

微型45°C弯头 Micro 45 Elbow

规格	型号	尺寸						材质
Tube OD In	Ordering Number	OD (mm)	ID (mm)	B (mm)	L (mm)	F (mm)	T (mm)	Material
1/4"	SS-MOE4-X-T	6.35	4.35	6.35	10.10	7.94	1.0(0.89)	sus316L
3/8"	SS-MOE6-X-T	9.53	7.53	6.35	11.91	11.11	1.0(0.89)	sus316L
1/2"	SS-MOE8-X-T	12.7	10.22	6.35	13.49	14.29	1.0(0.89)	sus316L

备注:如选择洁净等级 示例:SS-ME4-X-T
X:代表选择洁净(表面处理)等级 21代表EP 20代表BA T:代表选择管壁厚

Note: To Order Tubing For Opinal Surface Finishes , Example: Kuzu-ME4-X-T
X-Surface Finishes, Use 21 For EP (Electropolished and Specially Cleaned to Meet UHP Syetem Requirements), Use 20 For BA
T- Tube Wall Thickness

高纯接头系列

High Purity Fitting Series



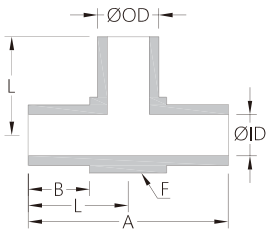

订购指南 Order Information

微型三通 Micro Tee

规格	型号	尺寸							材质
Tube OD In	Ordering Number	OD (mm)	ID (mm)	A (mm)	B (mm)	L (mm)	F (mm)	T (mm)	Material
1/4"	SS-MT4-X-T	6.35	4.35	20.64	6.35	10.32	7.94	1.0(0.89)	sus316L
3/8"	SS-MT6-X-T	9.53	7.53	23.81	6.35	11.91	11.11	1.0(0.89)	sus316L
1/2"	SS-MT8-X-T	12.7	10.22	26.99	6.35	13.50	14.29	1.24(1.0)	sus316L
3/4"	SS-MT12-X-T	19.05	15.75	33.35	6.35	16.68	20.65	1.65(1.24)	sus316L

备注:如选择洁净等级 示例:SS-ME4-X-T
X:代表选择洁净(表面处理)等级 21代表EP 20代表BA T:代表选择管壁厚

Note: To Order Tubing For Opinal Surface Finishes , Example: Kuzu-ME4-X-T
X-Surface Finishes, Use 21 For EP (Electropolished and Specially Cleaned to Meet UHP Syetem Requirements), Use 20 For BA
T- Tube Wall Thickness



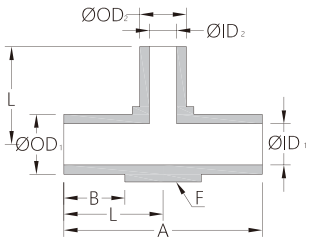

订购指南 Order Information

微型变径三通 Micro Reducing Tee

规格	型号	尺寸								材质
Tube OD In	Ordering Number	OD1 (mm)	OD2 (mm)	ID1 (mm)	ID2 (mm)	A (mm)	B (mm)	L (mm)	T (mm)	Material
3/8"-1/4"	SS-RMT4-X-T	9.53	6.35	7.53	4.35	23.81	6.35	11.91	1.0(0.89)	sus316L
1/2"-1/4"	SS-RMT6-X-T	12.7	6.35	10.22	4.35	26.99	6.35	14.29	1.24(1.0)&1.0(0.89)	sus316L
1/2"-3/8"	SS-RMT8-X-T	12.7	9.53	10.22	7.53	26.99	6.35	14.29	1.24(1.0)&1.0(0.89)	sus316L

备注:如选择洁净等级 示例:SS-RMT4-X-T
X:代表选择洁净(表面处理)等级 21代表EP 20代表BA T:代表选择管壁厚

Note: To Order Tubing For Opinal Surface Finishes , Example: Kuzu-RMT4-X-T
X-Surface Finishes, Use 21 For EP (Electropolished and Specially Cleaned to Meet UHP Syetem Requirements), Use 20 For BA
T- Tube Wall Thickness

高纯接头系列

High Purity Fitting Series



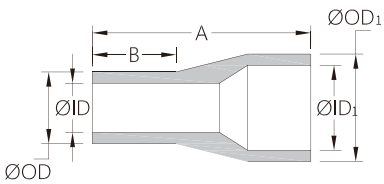

订购指南 Order Information

微型焊接大小头 Micro Reducing

规格	型号	尺寸							材质
Tube OD In	Ordering Number	OD1 (mm)	OD2 (mm)	ID1 (mm)	ID2 (mm)	A (mm)	B (mm)	T (mm)	Material
3/8"-1/4"	SS-RMU6-4-X-T	9.53	6.35	7.53	4.35	19.05	6.35	1.0(0.89)	sus316L
1/2"-1/4"	SS-RMU8-4-X-T	12.70	6.35	10.22	4.35	19.05	6.35	1.24(1.0)&1.0(0.89)	sus316L
1/2"-3/8"	SS-RMU8-6-X-T	12.70	9.53	10.22	7.53	19.05	6.35	1.24(1.0)&1.0(0.89)	sus316L

备注：如选择洁净等级 示例：SS-RMU6-4-X-T
X：代表选择洁净(表面处理)等级 21代表EP 20代表BA T:代表选择管壁厚

Note: To Order Tubing For Opinal Surface Finishes , Example: Kuzu-RMU6-4-X-T
X-Surface Finishes, Use 21 For EP (Electropolished and Specially Cleaned to Meet UHP Syetem Requirements), Use 20 For BA
T- Tube Wall Thickness



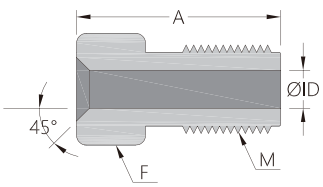

订购指南 Order Information

公头 MALE NUT

规格	型号	尺寸				材质
Tube OD In	Ordering Number	ID (mm)	A (mm)	F (mm)	M (mm)	Material
1/4"	SS-MNT04	9.00	18.30	15.90	9/16-18UNF	sus316L
1/2"	SS-MNT08	15.30	20.00	23.80	7/8-14UNF	sus316L
3/4"	SS-MNT12	22.60	25.40	33.30	11/4-18UNF	sus316L
1"	SS-MNT16	30.10	30.20	41.30	11/2-20UNF	sus316L

高纯接头系列

High Purity Fitting Series



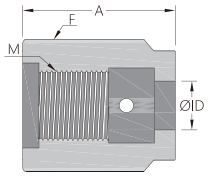

订购指南 Order Information						
母头 FEMALE NUT						
规格	型号	尺寸				材质
Tube OD In	Ordering Number	ID (mm)	A (mm)	F (mm)	M (mm)	Material
1/4"	SS-FNT04	9.00	18.30	15.90	9/16-18UNF	sus316L
1/2"	SS-FNT08	15.30	20.00	23.80	7/8-14UNF	sus316L
3/4"	SS-FNT12	22.60	25.40	33.30	11/4-18UNF	sus316L
1"	SS-FNT16	30.10	30.20	41.30	11/2-20UNF	sus316L



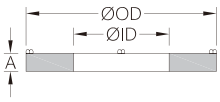

订购指南 Order Information					
垫片 GASKET					
规格	型号	尺寸			材质
Tube OD In	Ordering Number	OD (mm)	ID (mm)	A (mm)	Material
1/4"	SS-GAT04	11.94	9.00	0.70	sus316L
1/2"	SS-GAT08	19.81	15.30	0.75	sus316L
3/4"	SS-GAT12	28.96	22.60	0.75	sus316L
1"	SS-GAT16	35.56	30.10	0.75	sus316L

高纯接头系列

High Purity Fitting Series



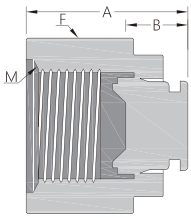

订购指南 Order Information

堵头 CAP

规格	型号	尺寸				材质
Tube OD In	Ordering Number	A (mm)	B (mm)	F (mm)	M (mm)	Material
1/4"	SS-CAT04	22.90	11.30	19.10	9/16-18UNF	sus316L
1/2"	SS-CAT08	25.60	12.20	27.00	7/8-14UNF	sus316L
3/4"	SS-CAT12	32.80	13.70	38.10	11/4-18UNF	sus316L
1"	SS-CAT16	39.40	16.00	44.50	11/2-20UNF	sus316L

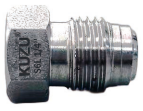

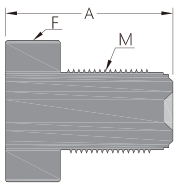

订购指南 Order Information

堵头 PLUG

规格	型号	尺寸			材质
Tube OD In	Ordering Number	A (mm)	F (mm)	M (mm)	Material
1/4"	SS-PLT04	23.20	19.10	9/16-18UNF	sus316L
1/2"	SS-PLT08	27.30	27.00	7/8-14UNF	sus316L
3/4"	SS-PLT12	36.30	38.10	11/4-18UNF	sus316L
1"	SS-PLT16	38.60	44.50	11/2-20UNF	sus316L

高纯接头系列

High Purity Fitting Series



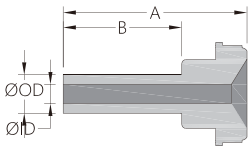

订购指南 Order Information

GLAND(S)

规格	型号	尺寸					材质
Tube OD In	Ordering Number	OD (mm)	ID (mm)	A (mm)	B (mm)	T (mm)	Material
1/4"	SS-LGS4-X-T	6.35	4.35	28.00	19.05	1.0(0.89)	sus316L
3/8"	SS-LGS6-X-T	9.53	7.53	28.50	19.05	1.0(0.89)	sus316L
1/2"	SS-LGS8-X-T	12.70	10.22	28.50	19.05	1.0(0.89)	sus316L
3/4"	SS-LGS12-X-T	19.05	15.75	34.00	23.00	1.65(1.24)	sus316L

备注:如选择洁净等级 示例:SS-LGS4-X-T
X:代表选择洁净(表面处理)等级 21代表EP 20代表BA T:代表选择管壁厚

Note: To Order Tubing For Opinal Surface Finishes , Example: KUZU-LGS4-X-T
X-Surface Finishes, Use 21 For EP (Electropolished and Specially Cleaned to Meet UHP Syetem Requirements), Use 20 For BA
T- Tube Wall Thickness



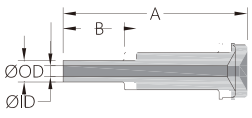

订购指南 Order Information

GLAND(L)

规格	型号	尺寸					材质
Tube OD In	Ordering Number	OD (mm)	ID (mm)	A (mm)	B (mm)	T (mm)	Material
1/4"	SS-LGL4-X-T	6.35	4.35	43.20	19.05	1.0(0.89)	sus316L
3/8"	SS-LGL6-X-T	9.53	7.53	45.50	19.05	1.0(0.89)	sus316L
1/2"	SS-LGL8-X-T	12.70	10.22	45.50	19.05	1.0(0.89)	sus316L
3/4"	SS-LGL12-X-T	19.05	15.75	45.50	23.00	1.65(1.24)	sus316L

备注:如选择洁净等级 示例:SS-LGL4-X-T
X:代表选择洁净(表面处理)等级 21代表EP 20代表BA T:代表选择管壁厚

Note: To Order Tubing For Opinal Surface Finishes , Example: KUZU-LGL4-X-T
X-Surface Finishes, Use 21 For EP (Electropolished and Specially Cleaned to Meet UHP Syetem Requirements), Use 20 For BA
T- Tube Wall Thickness

UHP系列

UHP Series



UHP系列

UHP Series

调压阀的操作 Operation of regul ator

调压阀可以把从钢瓶，压缩机等来源排出的气体或液体的压力降低到分析仪等设备所需的较低值。当进口压力与控制范围压力与液体处理系统的压力要求十分接近时，调压阀的分辨率和控制能力较高。分辨率指把调压阀从最低出口压力设置调整到最高出口压力设置所需的手柄转动周数。控制能力指调压阀保持给定出口压力设定点的能力。
Regulators reduce the pressure of a gas or liquid from a source, such as a cylinder or compressor, to a lower value needed by a device, such as an analyzer. A pressure regulator provides better resolution and control when its inlet and control range pressures closely match the pressure requirements of the fluid handling system. Resolution is the number of handle turns needed to adjust a regulator from its lowest to highest outlet pressure setting. Control is the ability of the regulator to hold a given outlet pressure set point.



TKF-Re1-1系列单级小流量减压器
TKF-Re1-1 Series Single-Stage Low-Flow Regulator



TKF-Re1-2系列高压减压器
TKF-Re1-2 Series High Pressure Regulators



TKF-Re1-3系列双级减压器
TKF-Re1-3 Series Two-Stageregulators



TKF-Re1-4系列低压背压阀
TKF-Re1-4 Series Low Pressure Backpressure Valve



UHP隔膜阀系列
UHP Diaphragm Valve Series



UHP 气动隔膜阀系列
HP Pneumatic Valve series



工业用限流量阀
Flow control valve



直通型颗粒物过滤器
Straight-through particulate filter

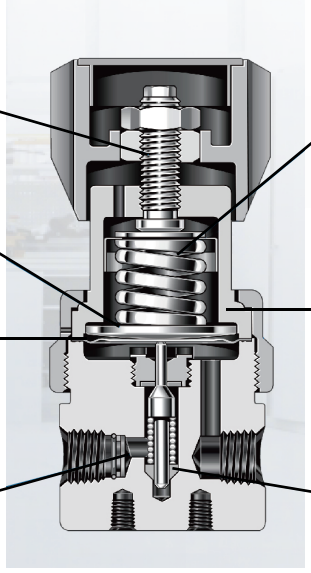

阀杆Stem

细牙螺纹可以低扭矩对弹簧进行精确调整。
Fine-pitch threads enable precise spring adjustment with low torque.

止动板Stop platte

该盘片在隔膜超压时为隔膜提供可靠支撑。
This disc provides positive backup to the diaphragm in case of diaphragm overpressure.

波纹隔膜Diaphragm

此全金属隔膜是进口压力与量程 弹簧之间的传感机构。波纹无穿孔设计保证了更高的灵敏度和更长的寿命。活塞传感机构(如下所示)能够承受更高的压力。
The all-metal diaphragm acts as the sensing mechanism between the inlet pressure and the range spring. The convoluted, nonperforated design ensures greater sensitivity and longer life. A piston sensing mechanism (shown below) can accommodate higher

进口Inlet

网状进口过滤器Inlet Filter
调压阀容易被系统内的颗粒物破坏。减压调压阀的入口内有一个通过扣环安装的25 µm 过滤器。过滤器很容易拆下以便清洗或者把 调压阀用于液体环境。
Regulators are susceptible to damage from system particles.Swagelok pressure-reducing regulators include a 25 µm press fit filter. It can be removed to usethe regulator in liquid service.

量程弹簧Spring

旋转手柄会压缩弹簧，将提升阀芯推离阀座并提高出口压力。
Turning the handle compresses the spring, pushing the poppet away from the seat and increasing outlet pressure.

两件式阀盖Two-piece bonnet

两件式设计使得在压紧阀盖环，时隔膜密封承受线性负载，从而消除了装配过程中对隔膜造成的扭矩破坏。
The two-piece design provides linear load on the diaphragm seal when the cap ring is tightened, eliminating torque damage to the diaphragm during assembly.

出口Outlet

提升阀芯减震器Poppet Damper
提升阀芯减震器能保持提升阀芯定位准确并减少震动和共振。
The poppet damper keeps the poppet aligned and reduces vibration and resonance.

UHP系列

UHP Series



TKF-Re1-1系列 单级小流量减压器

TKF-Re1-1 Single-stage low-flow regulator series

结构特点 Features

- 单级式减压结构 Single-state Construction Regular
- 母体与膜片采用硬密封形式 Hard Seal Applied Between the Body And Diaphragm
- 母体螺纹：1/2"NPT(F) 压力表接口1/4"NPT(F) 1/2"NPT(F)End Connection,1/4"NPT(F) Gage Connection
- 内部结构易吹扫 Easily Purged
- 内设双层过滤网 Double- deck Strainer
- 可采用面板或墙式安装 Panel Mounting Or Wall Mounting

材料结构 Materials Of Construction

- 母 体 Body:S8316L,
- 上盖 Bonnot:SS304,
- 阀 座 Valve Soat:PTFE,PCTFE,PEEK
- 膜 片 Diaphragm:SS316L、HASTELLOY"C-22

技术参数 Specifications

- 最大输入压力 Inlet pressure max.:500psig
- 输出压力 Outlet pressure:0~160psig,0~250psig
- 安全测试压力 Proof pressure:1.5倍的最大输入压力 1.5Times Max.Inlet Pressure
- 工作温度 Operating temperature:-40°F~+165°F (-40°C~+74°C)
- 泄漏率 Leak rate:2×10^{-8} atm.cm^3/sec He
- CV:0.08,0.15
- 重量 Weight:1.2kg

内部结构 Internal Structure

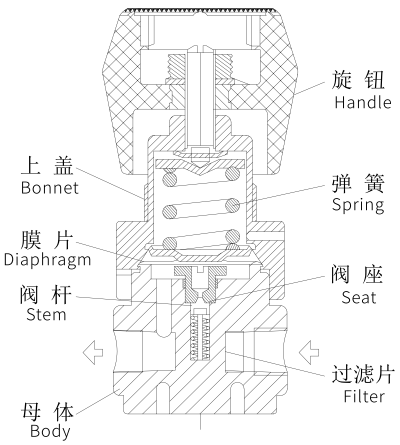

流量曲线图 Flow Data

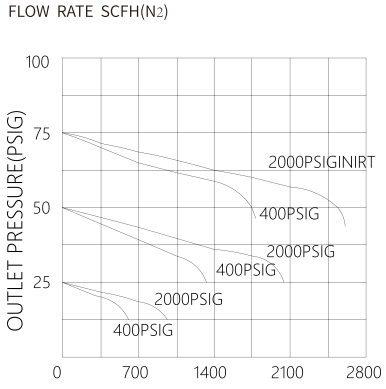

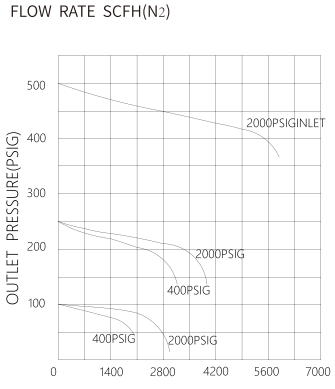

UHP系列

UHP Series

安装尺寸图
Dimensions

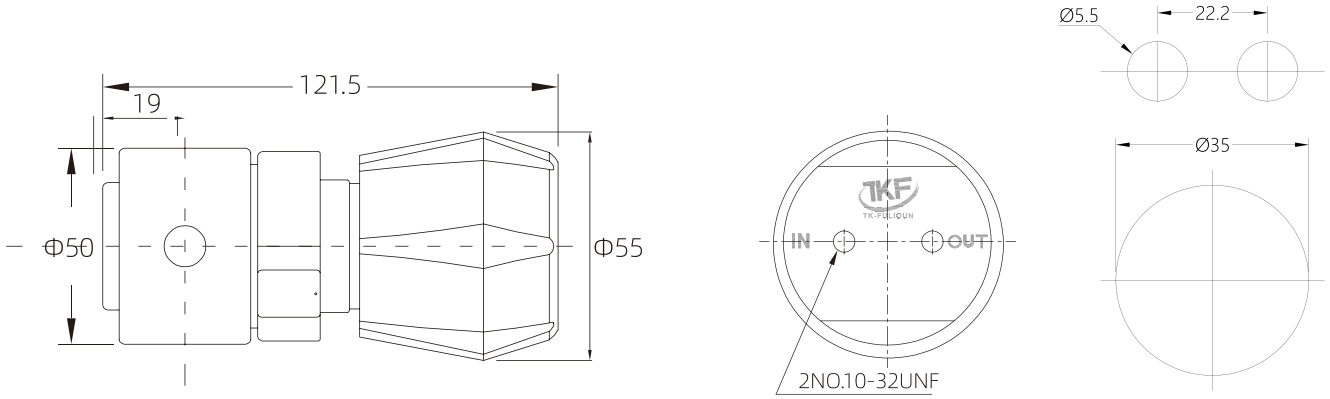

端口配置
Porting Configuration

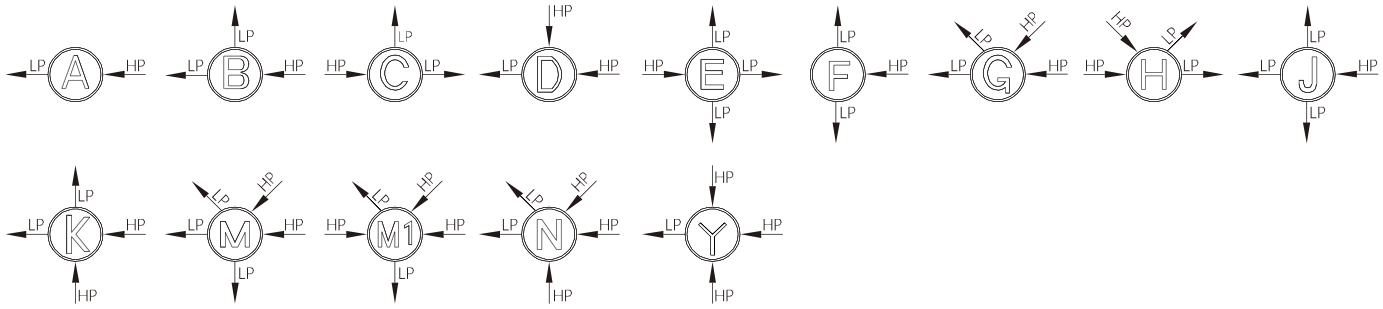

订购指南 Order Information								
选型序列举例 EX:TKF-Re1-1	L	A	- D	- F	- G	- 00	- 00	- P
基本型号 Basic Ordering Number	母体材质 Body Materials	母体孔位配置 Body Ports configuration	输入压力 Inlet Pressure	输出压力 Outlet Pressure	压力表 Gauge	出气形式 Outlet Cnnnection	进气形式 Inlet Connection	选项 Options
TKF-Re1-1	L:SS316L	A	0.500psig	F:0-160psi	G:附压力表Gauge	00:1/4"NPT(F)	00:1/4"NPT(F)	P:面板式安装Panel Mounting
		B	x:160osi	G.0-250psig	(MPa)	01:1/4"NPT(M)	01:1/4"NPT(M)	R:安全阀ReliefValve
		C	F.250osic	0-100psio	P:附压力表Gauge		10:1/8"卡套接头Tube Fitting	M:针阀Needle Valve
		E		K:0-500sio	(psi/bar)		11:1/4"卡套接头Tube fitting	D:膜片阀Diaphragm Valve
		F		-0-25psig	W:无压力表None Gauge		12:3/8"卡套接头Tube Fitting	H:哈氏合金膜片Hasteloy diaphragm
		G		M:0-15psig			15:6mm卡套接头Tube Fitting	
		H		0:30"HgVac-30psig			16;8mm卡套接头Tube Fitting	
		J		S:30"HgVac-60psig			17:10mm卡套接头	
		K		T:30"HgVac-100psig			18:12mm卡套接头Tube Fitting	
		M		U:30"HgVac-200psig				
		其它孔位可供选择 Other Options				其它形式接头可供选择 Other Options	其它形式接头可供选择 Other Options	

UHP系列

UHP Series



结构特点 Features

- ◆ 活塞式减压结构 Piston Construction
- ◆ 母体螺纹：14"NPT(F) 1/4"NPT(F)End Connection
- ◆ 内设双层过滤网 Double- deck Strainer
- ◆ 可采用面板或墙式安装 Panel Mounting Or Wall Mounting

材料结构 Materials Of Construction

- ◆母 体 Body: 88316L
- ◆上 盖 Bonnet:88304
- ◆ 阀 座 Valvo seat: PCTFE,PEEK
- ◆O 型圈 O-ring:Viton

技术参数 Specifications

- ◆最大输入压力 Inlet Pressure max.:3500psig
- ◆ 输出压力Outlet pressure:0~1500psig,0~500psig,
- ◆ 安全测试压力 Proof pressure:1.5倍的最大输入压力
  1.5Times Max.Inlet Pressure
- ◆ 适 用 温 度 Operating temperature:-10F~+165°F(-23°°C~+74°C)
- ◆ 泄漏率 Leak rate:2×10^{-8}atm.cm^3/sec He
- ◆ Cv:0.06
- ◆重 量 Weight:1.3kg

TKF-Re1-2系列高压减压器

TKF-Re1-2 High-pressure regulator series

内部结构
Internal Structure

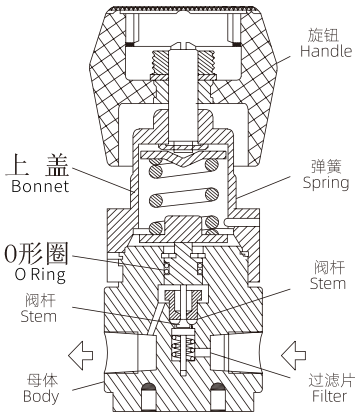

流量曲线图
Flow Data

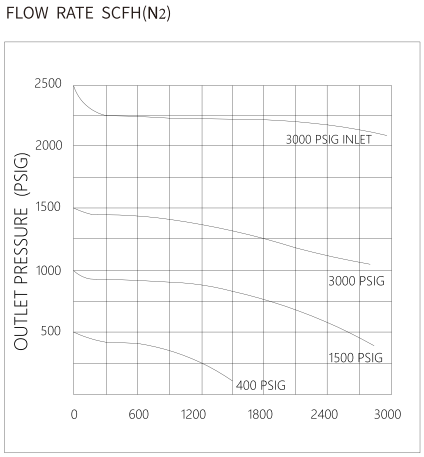

UHP系列

UHP Series

安装尺寸图
Dimensions

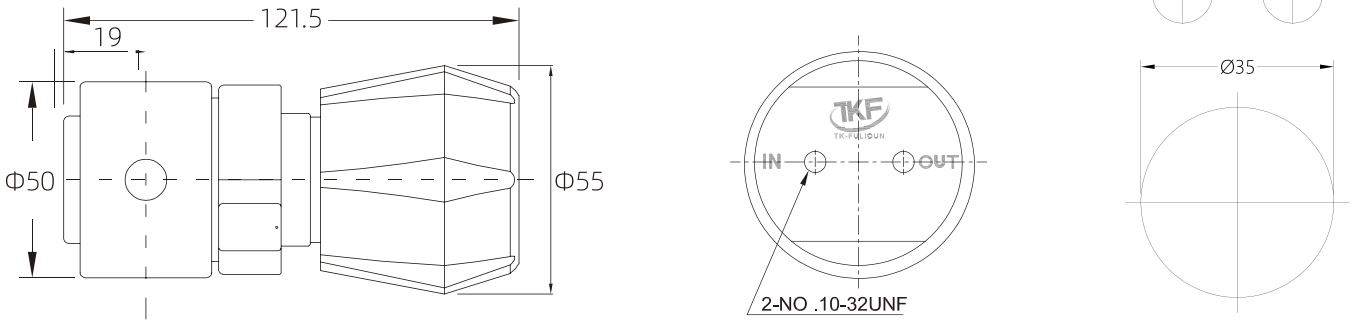

端口配置
Porting Configuration

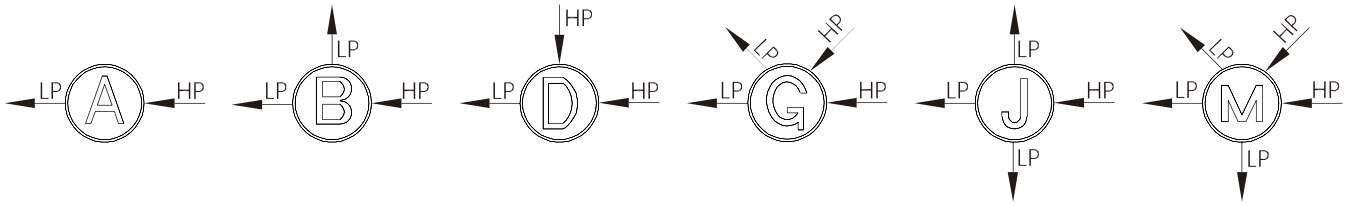

订购指南 Order Information								
选型序列举例 EX:TKF-Re1-1	L	A	- D	- F	- G	- 00	- 00	- P
基本型号 Basic Ordering Number	母体材质 Body Materials	母体孔位配置 Body Ports configuration	输入压力 Inlet Pressure	输出压力 Outlet Pressure	压力表 Gauge	进 气 形 式 Inlet Connection	出气形式 Outlet Cnnnection	选项 Options
TKF-Re1-2	L:SS316L	A	B:3500psi	D:2500psi	G:附压力表Gauge	00:1/4"NPT(F)	00:1/4"NPT(F)	P:面板式安装Panel Mounting
		B	D:1500psi	E:0-1500psi	(MPa)	01:1/4'NPT(M)	01:1/4'NPT(M)	D:膜片阀Diaphragm Valve
		D	X:500psi	F:0-500psi	P:附压力表Gauge		10:1/8" 卡套接头Tube Fitting	N-针阀Needle Valve
		G		G:0-250psig	(psi/bar)		11:1/4" 卡套接头 Tube Fitting	
		J			W:无压力表None Gauge		12:3/8" 卡套接头Tube Fitting	
		M					15:6mm卡套接头Tube Fitting	
							16:8mm卡套接头Tube Fitting	
						其它形式接头可供选择 Other Options		

UHP系列

UHP Series



结构特点 Features

◆双级式减压结构 Bipolar Construction Regular
◆母体与膜片采用硬密封形 Hard Seal Applied Between the Body And Diaphragm
◆母体螺纹：1/4”NPT(F) 1/4"NPT(F)End Connection
◆内部结构易吹扫 Easily Purged
◆内设双层过滤网 Double- deck Strainer
◆可采用面板或墙式安装 Panel Mounting Or Wall Mounting

材料结构 Materials Of Construction

◆母 体 Body:SS316L
◆上 盖 Bonnet:SS304
◆ 阀 座 Valve seat:PTFE,PCTFE,PEEK
◆ 膜 片 Diaphragm:SS316L、HASTELLOY"C-22

技术参数 Specifications

◆最大输入压力 Inlet pressure max.:6000psig
◆输出压力 Outlet pressure:0~1500psig,0~3000psig,
◆安全测试压力 Proof pressure:1.5倍的最大输入压力
1.5Times Max.Inlet Pressure
◆适用温度 Operating temperature:-40°F~+1650F(-40°C~+74°C
◆泄漏率 Leak rate:2×10^{-8}atm.cm^3/sec He
◆CV:0.06
◆ 重 量 Weight:1.4kg

TKF-Re1-3系列双级减压器

TKF-Re1-3 Tow-stage regulator Series

内部结构
Internal Structure

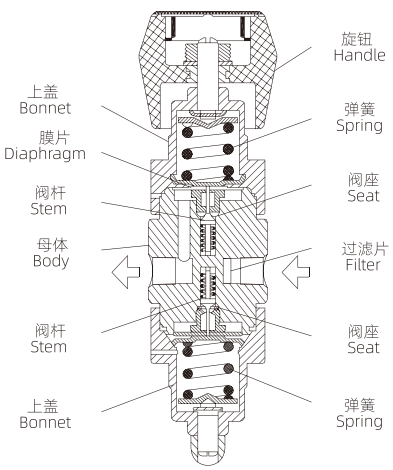

流量曲线图
Flow Data

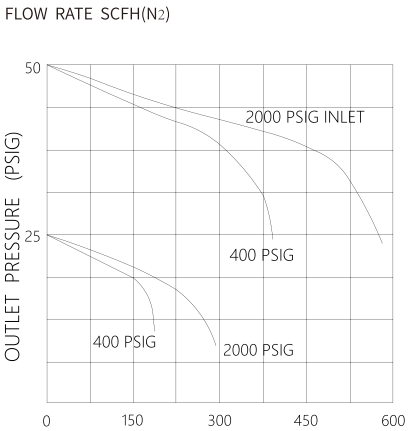

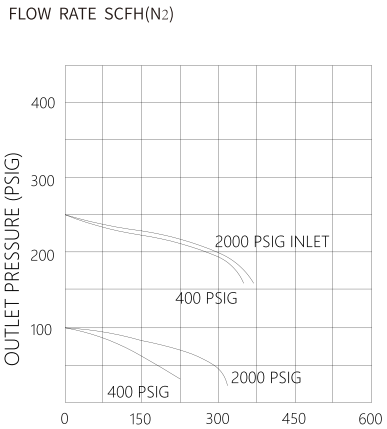

UHP系列

UHP Series

安装尺寸图
Dimensions

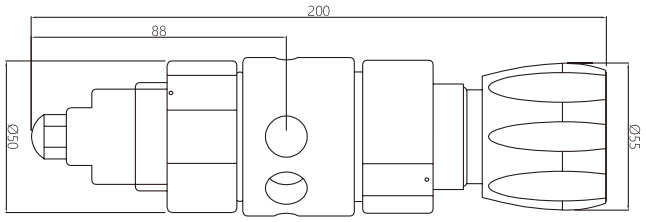



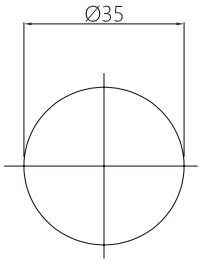

端口配置
Porting Configuration

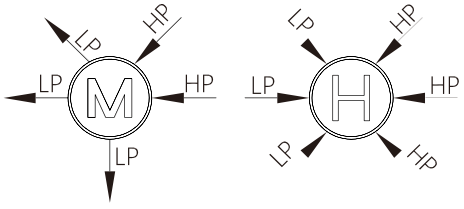

订购指南 Order Information								
选型序列举例 EX:TKF-Re1-1	L -	M -	D -	F -	G -	00 -	00 -	P
基本型号 Basic Ordering Number	母体材质 Body Materials	母体孔位配置 Body Ports configuration	输入压力 Inlet Pressure	输出压力 Outlet Pressure	压力表 Gauge	进 气 形 式 Inlet Connection	出气形式 Outlet Cnnnection	选项 Options
TKF-Re1-3	L:SS316L	M	D:6000psi	G:0-250psi	G:附压力表Gauge	00:1/4"NPT(F)	00:1/4"NPT(F)	P:面板式安装 Panel Mounting
		H	X:3000psi	I:0-100psi	(MPa)	01:1/4"NPT(M)	01:1/4"NPT(M)	R:安全阀Relief Valve
			F:1500psi	Y:0-50psi	P:附压力表 Gauge		10:1/8" 卡套接头 Tube Fitting	N:针阀Needle Valve
				L:0-25psi	(psi/bar)		11:1/4" 卡套接头 Tube Fitting	D:膜片阀Diaphragm Valve
				M:0-15psi	W:无压力表None gauge		12:3/8" 卡套接头 Tube Fitting	H:哈氏合金膜片Hastelloy Diaphragm
				Q:30"Hg Vac-30psi			15:6mm卡套接头 Tube Fitting	
				S:30"Hg Vac-60psi			16:18mm卡套接头 Tube Fitting	
				T:30"Hg Vac-100psi				
				U:30"Hg Vac-200psi		其它形式接头可供选择 Other Options	其它形式接头可供选择 Other Options	

UHP系列

UHP Series



TKF-Re1-4系列低压背压阀

TKF-Re1-4 Low Pressure Backpressure Regulator Series

结构特点 Features

◆ 安全和精确的活塞式结构 Piston Construction Type
◆母体螺纹：1/2"NPT(F)压力表接口1/4"NPT(F)(1/2"NPT(F)End Connection,1/4"NPT(F) End Connection
◆三种不同控制压力范围可供选择 Three different regulate pressure ranges are available)
◆敏感原件设计控制压力准确 Sensitive component design, accurate pressure control
◆可采用面板或墙式安装 Panel Mounting Or Wall Mounting

材料结构 Materials Of Construction

◆母 体 Body:SS316L,
◆上 盖 Bonnet:SS304,
◆阀 座 Valve seat:PCTFE
◆ 密封件Seal:Viton

技术参数 Specifications

◆最大调节压力 Control pressure max.:1500psig
◆调节压力 Control pressure:0~160psig,0~500psig
◆安全测试压力 Proof pressure:1.5倍的最大输入压力 1.5Times Max.Inlet Pressure
◆泄漏率 Leak rate:2×10^{-8}atm.cm^3/sec He
◆ CV:1.0

内部结构 Internal Structure

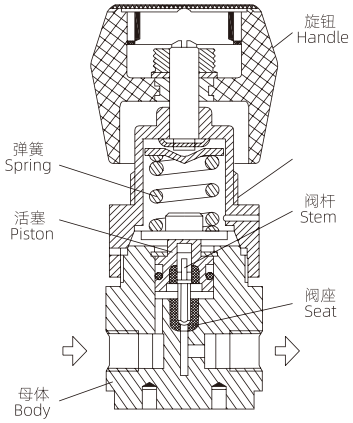

流量曲线图 Flow Data

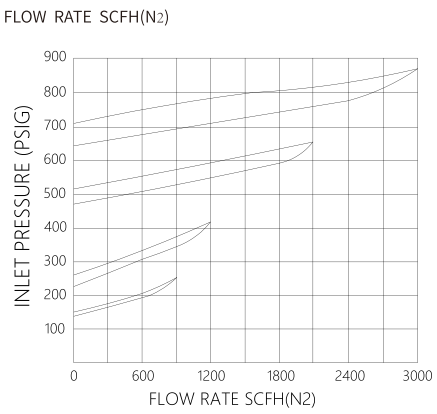

UHP系列

UHP Series

安装尺寸图
Dimensions

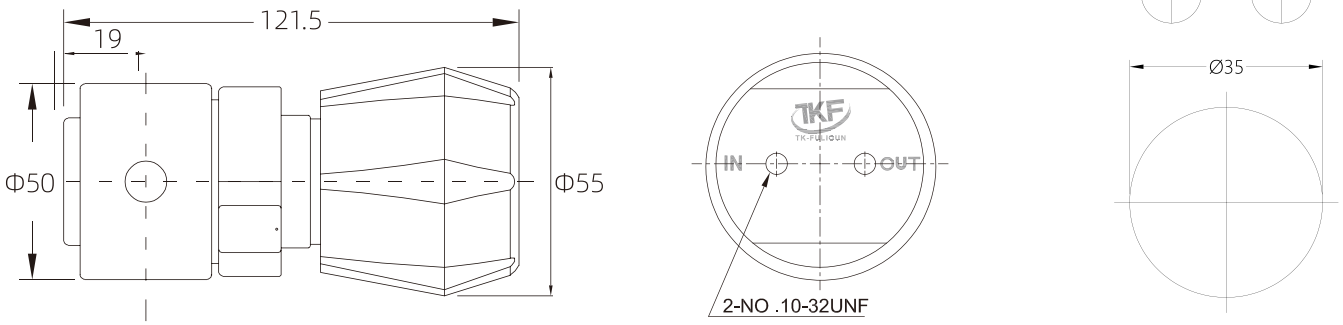

端口配置
Porting Configuration

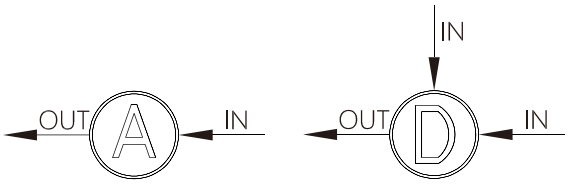

订购指南 Order Information

选型序列举例 EX:TKF-Re1-1	L	A	-	D	-	G	-	00	-	00	-	P
基本型号 Basic Ordering Number	母体材质 Body Materials	母体孔位配置 Body Ports configuration		输入压力 Inlet Pressure		输出压力 Outlet Pressure		进气形式 Inlet Connection		出气形式 Outlet Cnnnection		选项 Options
TKF-Re1-4	L:SS316L	A		E:0-1500psig		G:附压力表 Gauge		00:1/4"NPT (F)		00.1/4"NPT (F)		P:面板式安装Panel Mounting
		D		F:0-500psig		(MPa)		01:1/4"NPT (M)		01:1/4"NPT (M)		
				G:0~160psig		P:附压力表 Gauge				10:1/8"卡套接头 Tube Fitting		
						(psi/bar)				11:1/4"卡套接头 Tube Fitting		
						W:无压力表 None Gauge				12:3/8"卡套接头 Tube Fitting		
								其它形式接头可供选择Other Options		其它形式接头可供选择Other Options		

UHP系列

UHP Series



特点 Features

◆ 无填料阀，全金属对大气密封 Packless Valve with All-matal seal to atmosphere

◆从全开至关闭只需要转动手柄四分之一圈Quick,quarter - turn actuation。

◆置指示环，提供阀为全开或关闭的目测确认 Indicating Dial design, Visual indication of valve position。

◆花键手柄和致动器防止手柄滑移并保证阀可靠动作 Splined Handle Design, Prevents handle slippage and ensures reliable valve operation.。

◆ 接口连接方式 End connection：VCR，Tube Fitting，Butt Weld

UHP 隔膜阀系列

UHP Diaphragm Valve Series

内部结构

Internal Structure

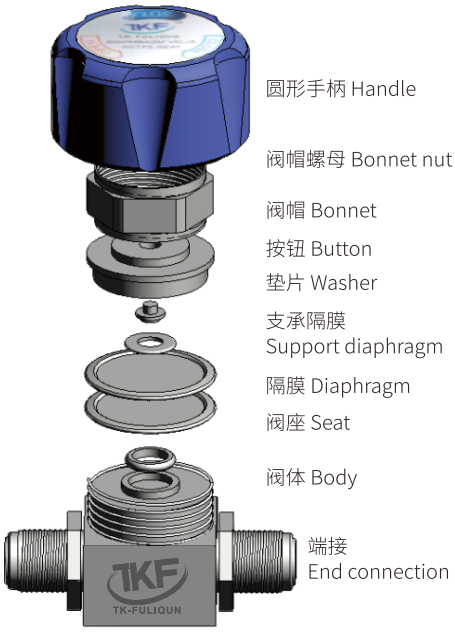

材料结构 Materials Of Construction

元件 Componet	材料等级/ASTM规范 Material Grade/ASTM Specification
阀体与整体端接Body and integral end connections	316L VIM-VAR SS/SEMI F20-0305超高纯High Purity
焊接VCR端接Welded VCR endconnections	316L VAR SS/SEMI F20-0305超高纯High Purity
卡套管接头 Tube Fitting	316不锈钢Stainless Steel/A276
阀座Seat	PCTFE/D1430
隔膜Diaphragm	Elgiloy/AMS 5876
支承隔膜Supput diaghragm	镀银Silver-plated Elgiloy /AMS 5876
垫片Washer	S17400
阀帽Bonnet	S17400 不锈钢Stainless Steel
阀帽螺母Bonnet nut	316不锈钢Stainless steel
手动执行机构 Manual actuator	
按钮Button	316不锈钢Stainless Steel
整体锁定手柄 Integral lockout handle	不锈钢制玻璃填充尼龙Nylon with stainless steel insert
圆形手柄 Round handle	带有不锈钢插入件的多元酯纤维Polyester with stainless steel insert

UHP系列

UHP Series

安装尺寸图
Dimensions

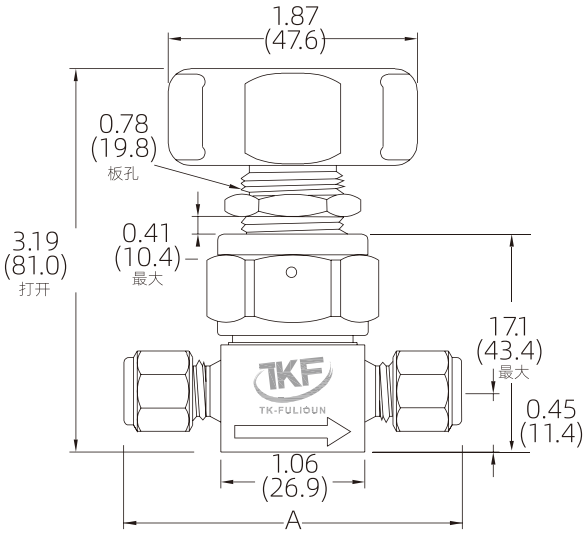

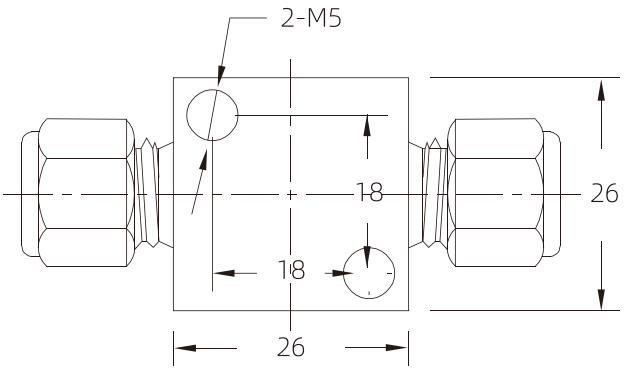

订购指南 Order Information

端接 Connection		型号 Ordering Number	流量系数 Flow Coefficient	本体材质 Body Material	尺寸 Basic Ordering Number
入口/出口 Inlet/outlet	尺寸Size				
卡套接头 Tube Fitting	1/4 in.	SS-DV4	Cv=0.3	sus316L	1.74(44.2)
	3/8 in.	SS-DV6	Cv=0.3	sus316L	1.74(44.2)
	1/2 in.	SS-DV8	Cv=0.3	sus316L	1.81(46)
外螺纹 Male VCR	1/4 in.	SS-DVF4	Cv=0.65	sus316L	2.54(64.5)
	3/8 in.	SS-DVF6	Cv=0.65	sus316L	2.78(70.6)
	1/2 in.	SS-DVF8	Cv=0.65	sus316L	2.78(70.6)

备注：如选择压力 低压 (L) :0-1000Psi 高压 (H) :0-3000Psi
Note: if pressure selected Low pressure (L): 0-1000 Psi; High pressure (H): 0-3000si.

UHP系列

UHP Series



特点 Features

- ◆ 无填料阀，全金属对大气密封 Packless Valve with All-matal seal to atmosphere
- ◆工作压力达Working Pressure Up to: 3500 psig (241 bar)
- ◆温度达Temperature uo to 204°C(401°F)
- ◆ VCR面密封，卡套管接头和焊接端接 VCR、Butt weld and Tube fitting end Connection
- ◆流量系数(CV): 0.30 Flow coeficien
- ◆容易清洗以保持操作干净 Easy to purge to keep clean
- ◆高低压系列可供选择 High and lowpressure series areavailable

UHP 气动隔膜阀系列

UHP Pneumatic Diaphragm Valve series

材料结构 Materials Of Construction

内部结构

Internal Structure

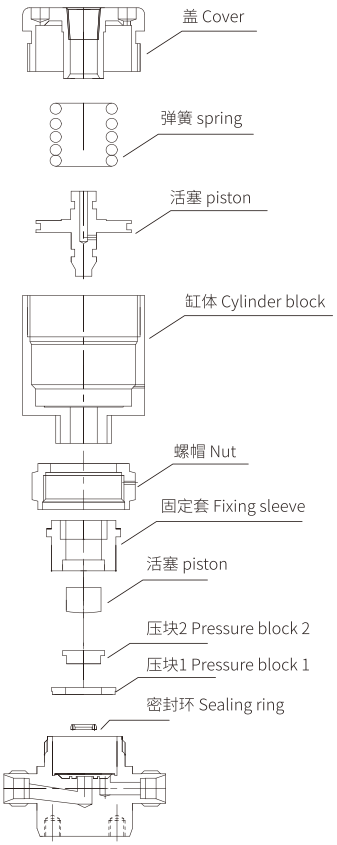

元件 Componet	材料等级/ASTM规范 Material Grade/ASTM Specification
阀体与整体端接Body and integral end connections	316L VIM-VAR SS/SEMI F20-0305超高纯High Purity
焊接VCR端接Welded VCR endconnections	316L VAR SS/SEMI F20-0305超高纯High Purity
卡套管接头 Tube Fitting	316不锈钢Stainless Steel/A276
阀座Seat	PCTFE/D1430
隔膜Diaphragm	Elgiloy/AMS 5876
支承隔膜Supput diaghragm	镀银Silver-plated Elgiloy /AMS 5876
垫片Washer	S17400
阀帽Bonnet	S17400 不锈钢Stainless Steel
阀帽螺母Bonnet nut	316不锈钢Stainless steel
手动执行机构 Manual actuator	
按钮Button	316不锈钢Stainless Steel
整体锁定手柄 Integral lockout handle	不锈钢制玻璃填充尼龙Nylon with stainless steel insert
圆形手柄 Round handle	带有不锈钢插入件的多元酯纤维Polyester with stainless steel insert

UHP系列

UHP Series

安装尺寸图
Dimensions

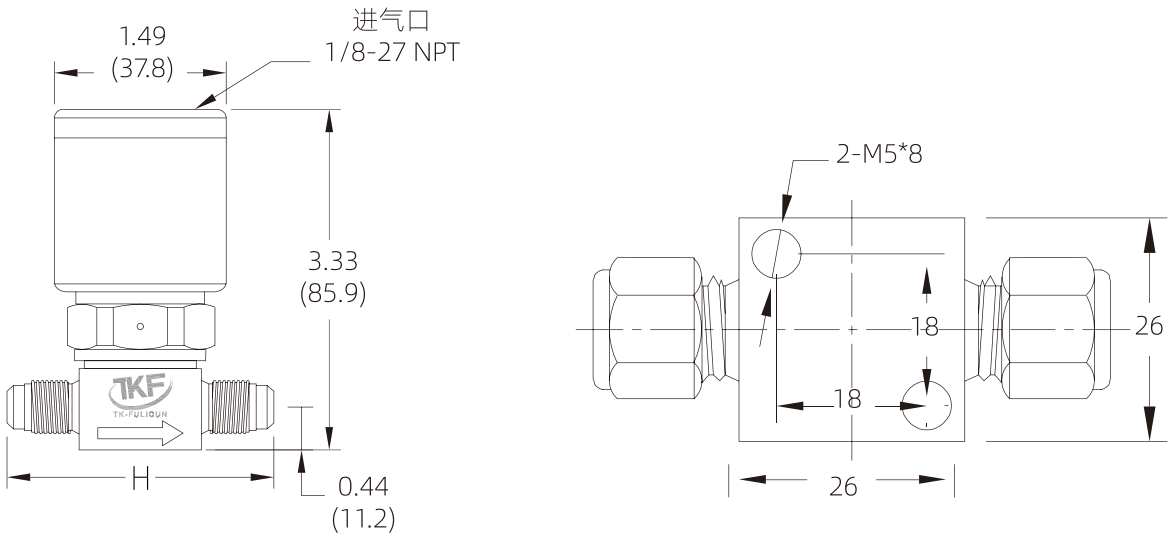

订购指南 Order Information						
系列	端接		型号	流量系数	尺寸	本体材质
Series	Connection		Ordering Number	Flow Coefficient	Size	Body Material
	入口/出口Inlet/Outlet	尺寸Size				
低压系列 low pressure	卡套接头Tube fitting	1/4in.	TKF-PV4	Cv=0.3	1.74(44.2)	sus316L
	卡套接头Tube fitting	3/8 in.	TKF-PV6	Cv=0.3	2.35(59.7)	sus316L
	外螺纹VCR接头 Male VCR	1/4 in.	TKF-PV4	Cv=0.3	2.78(70.6)	sus316L
	外螺纹VCR接头 Male VCR	3/8 in.	TKF-PV6	Cv=0.3	2.35(59.7)	sus316L
高压系列 High pressure	卡套接头Tube fitting	1/4 in.	TKF-HPV4	Cv=0.65	1.74(44.2)	sus316L
	卡套接头Tube fitting	3/8 in.	TKF-HPV6	Cv=0.65	2.78(70.6)	sus316L
	外螺纹VCR接头 Male VCR	1/4 in.	TKF-HPV4	Cv=0.65	1.74(44.2)	sus316L
	外螺纹VCR接头 Male VCR	3/8 in.	TKF-HPV6	Cv=0.65	2.78(70.6)	sus316L

备注：如选择压力 低压 (L) :0-1000Psi 高压 (H) :0-3000Psi
Note: if pressure selected Low pressure (L): 0-1000 Psi; High pressure (H): 0-3000si.

UHP系列

UHP Series



工业用限流量阀
Flow control valve

特点 Features

易安装 Easy to Installaion

◆压力达 Pressure up to: 6000 psig (413 bar)

◆不锈钢结构 Stainless Steel Constuction

◆温度达Temperature up to:204°C(400°F)

◆可选择卡套，螺纹或面密封末端连接 Tube Fitting、Screw thread and Face sealFitting End Connection

工作 Operation

系统正常工作中，弹簧加载的提动头保持在开启位。倘如下游出现过流情况，提动头迅速移动至切断位，停止系统介质的失控泄放。当系统压力通过排放口达到平衡时，弹簧会自动将提动头复位到开启位置。通过排放口的流量要低于切断范围流量的1%。

The spring-loaded poppet remains in the position during normal system opreation. Should an excess flow condition occur downstream, the poppet rapidly movee to the tripped position, stopping uncontrolled release of system media.when pressure equalizes though the bleed vent, the spring automatically resetes the poppet and open the valve.

特点
Features

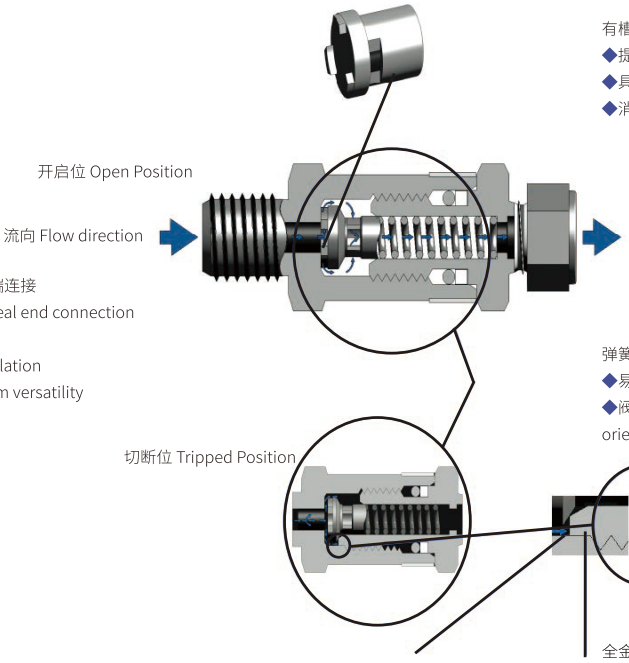

有槽提动头 Slotted Poppet
◆提高性能和可靠性 Improves performace
◆具有高流量能力 Provides high-flowcapacity
◆消除不应有的切断 Eliminates nuisance

可选择卡套，螺纹或面密封末端连接
Choice of tube,pipe,Or face Seal end connection
◆易安装Seal end connection
◆提高系统通用性Eases installation
◆降低总成本 Increases system versatility

弹簧加载致动 Spring-loaded actuation
◆易操作Eases operation
◆阀可在任何方位工作，增进系统安全 Allow valve to work in any orientation enhancing system safety

排放口Bleed vent
◆消除复杂旁路机构 Eliminates complex bypass mechanisms
◆弹簧可使提动头自动复位 Allows spring to reseal poppet atuomatically

全金属阀座All metal seat
◆提供耐用性 Improves durability
◆不要求维护 Requires no maintenance

UHP系列

UHP Series

安装尺寸图
Dimensions

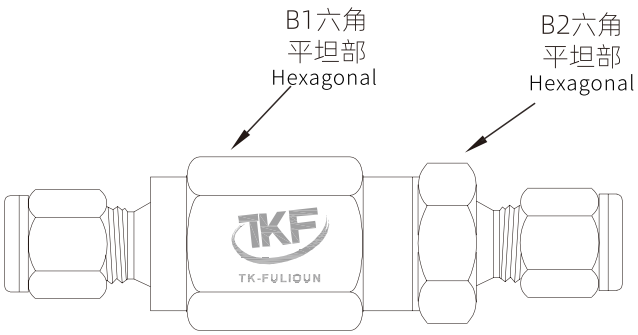

材料结构 Materials Of Construction

元件 Componet	材料牌号/ ASTM规格 Material grade/ASTM specification
1入口阀体inlet body	316 SS/A479
2标志圈indentification ring	聚醚酰亚胺Polyetherimide
3提动头poppet	316 SS/A479
4 弹 簧spring	302 SS/A313
5 O形圈o-ring	碳氟化物FKM
6支承环Backup ring	PTFE①/D1710
7出口阀体outlet body	316 SS/A479
润滑脂 lubricant	硅脂基Silicone based

订购指南 Order Information

端接 Connection		37C(100°F)下的压力额定值 Pressure Rate psig(bar)	型号 Ordering Number	尺寸 size in(mm) A	B1 B2	本体材质 Body Material
入口/出口Inlet/outlet	尺寸 Size					
英制管接头 Inch	1/4 in.	6000 (413)	SS-FCV4	2.43(61.7)	11/16	sus316L
	3/8 in.		SS-FCV6	2.75(69.9)	1	sus316L
	1/2 in.		SS-FCV8	2.97(75.4)		sus316L
公制管接头 Metric	6 mm	6000 (413)	SS-FCV6MM	2.43 (61.7)	11/16	sus316L
	8 mm		SS-FCV8MM	2.70 (68.6)	1	sus316L
	10 mm		SS-FCV10MM	2.80(71.1)		sus316L
	12 mm		SS-FCV12MM	2.96(75.2)		sus316L
NPT(M)	1/8 in.	6000 (413)	SS-FCVM2	1.87(47.5)	11/16	sus316L
	1/4 in.	6000 (413)	SS-FCVM4	2.12 (53.8)		sus316L
	3/8 in.	6300 (365)	SS-FCVM6	2.55(64.8)	1	sus316L
	1/2 in.	4900 (337)	SS-FCVM8	3.03(77.0)	11/16	sus316L

UHP系列

UHP Series

▶产品描述 Description

过滤器采用烧结式过滤元件，适用与多数工艺气体、惰性气体和CDA的过滤应用。过滤元件可替换，为实验室和高校提供了一个低成本的气体过滤解决方案。
filter adopts sintered filter elements and is applicable to the filtration of most process gases, inert gases and CDA.The filter elements are replaceable. It provides a low-cost gas filtration solution for laboratories and universities.



直通型颗粒物过滤器
Straight-through particulate filter

特点 Features

- ◆结构紧凑易于安装 Compact structure and easy to install
- ◆结构紧凑，应用于有限空间内，多种端接类型可供选择 Compact structure, applied in limited space, with a variety of termination types to choose from.
- ◆不锈钢结构 Stainless Steel Constuction
- ◆多种过滤精度选择 A variety of filtration accuracy options
- ◆过滤元件可替换 The filter element is replaceable.
- ◆与介质接触面无油清洗 The contact surface with the medium is cleaned without oil.

▶规格&参数 Spetiications

材料 material	过滤元件 Filtration element	316 SS
	主体 Body	316L SS
	垫片 gasket	316 SS
	弹簧 spring	316 SS
表面处理 Surface treatment	内表面粗糙度 Inner surface roughness	Ra≤0.64μm
	VCR表面粗糙度 VCR surface roughness	Ra≤0.2μm
过滤精度 Filtration accuracy	烧结式过滤元件 Sintered filter element：0.01/0.1/0.5/2/5/10/40/70(μm)	
	滤网式过滤元件 filtering screen element：40/140/230/440(μm)	
拦截效率 Interception efficiency	99%@对应过滤精度the filtering precision	
过滤面积 Filtration area	4L系列Series：≥8cm²	
	8L系列Series：≥12cm²	
	12L系列Series：≥18cm²	
接口形式 Connection	VCR (M)/卡套密封/NPT外螺纹 VCR (M)/tube fitting/NPT(M)	
气密性 氦质谱检漏 Helium mass spectrometer leak detection For air tightness	设计要求The design specifications：2×10-12atmcm²/sec Design requirements	
	过程验证Process validation：1×10-10atmcm²/sec Process validation	
操作条件 Operating conditions	最高工作压力 Maximum working pressure	20.7MPa @25°C
	最高正向工作压差 The maximum positive working pressure difference	3.0MPa@25°C
	最高反向工作压差 The maximum reverse working pressure difference	1.0 MPa@25°C
	最高工作温度 Maximum working temperature	450°C(无PTFE垫片 None PTFE Gaskets)
		20°C(含PTFE垫片Including gaskets)

UHP系列

UHP Series

▶流速性能 PeformanceData

孔径 aperture size μm	进口压力Inlet Pressure psig(bar)@4L			进口压力Inlet Pressure psig(bar)@6L/8L		
	5(0.34)	10(0.68)	15(1.0)	5(0.35)	10(0.68)	15(1.0)
	空气流量 Air flow, slpm@20°C					
0.5	3.4	7.3	13	10	24	45
2	17	39	65	39	79	110
5	39	82	130	51	119	190
10	34	82	130	51	130	220
40	87	160	240	140	280	420
70	110	210	280	170	310	450

▶安装尺寸图 Dimensions

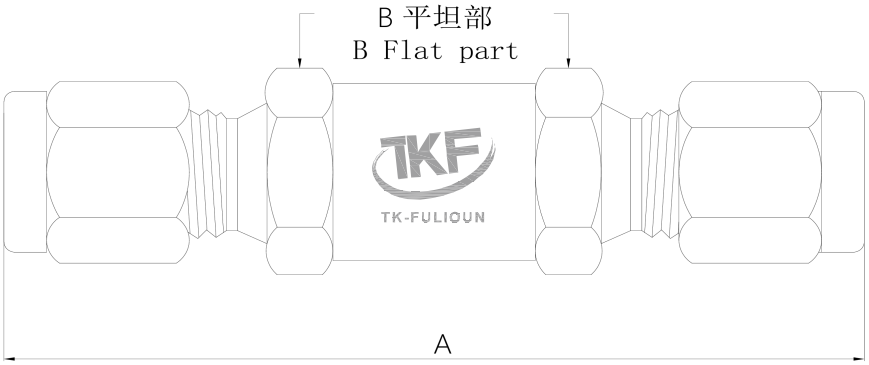

订购指南 Order Information

端接 Connection		类别 category	型号 Ordering Number	尺寸mm Size			本体材质 Body Material
入口/出口Exit/Entrance	尺寸Size			进/出口孔径 Inlet/Outlet Aperture Diameter	A	B	
VCR (M)	1/4 in	4L	SS-STM4	4.75	76	12	sus316L
	3/8 in	8L	SS-STM6	10.3	80	12	sus316L
	1/2 in	12L	SS-STM8	13.8	83	14	sus316L
卡套接头 Tube fitting	1/4 in	4L	SS-STS4	4.75	73	12	sus316L
	3/8 in	8L	SS-STS6	7.14	77	12	sus316L
	1/2 in.	8L	SS-STS8	10.3	86	14	sus316L

实验室系列

Laboratory series



实验室系列

Laboratory series

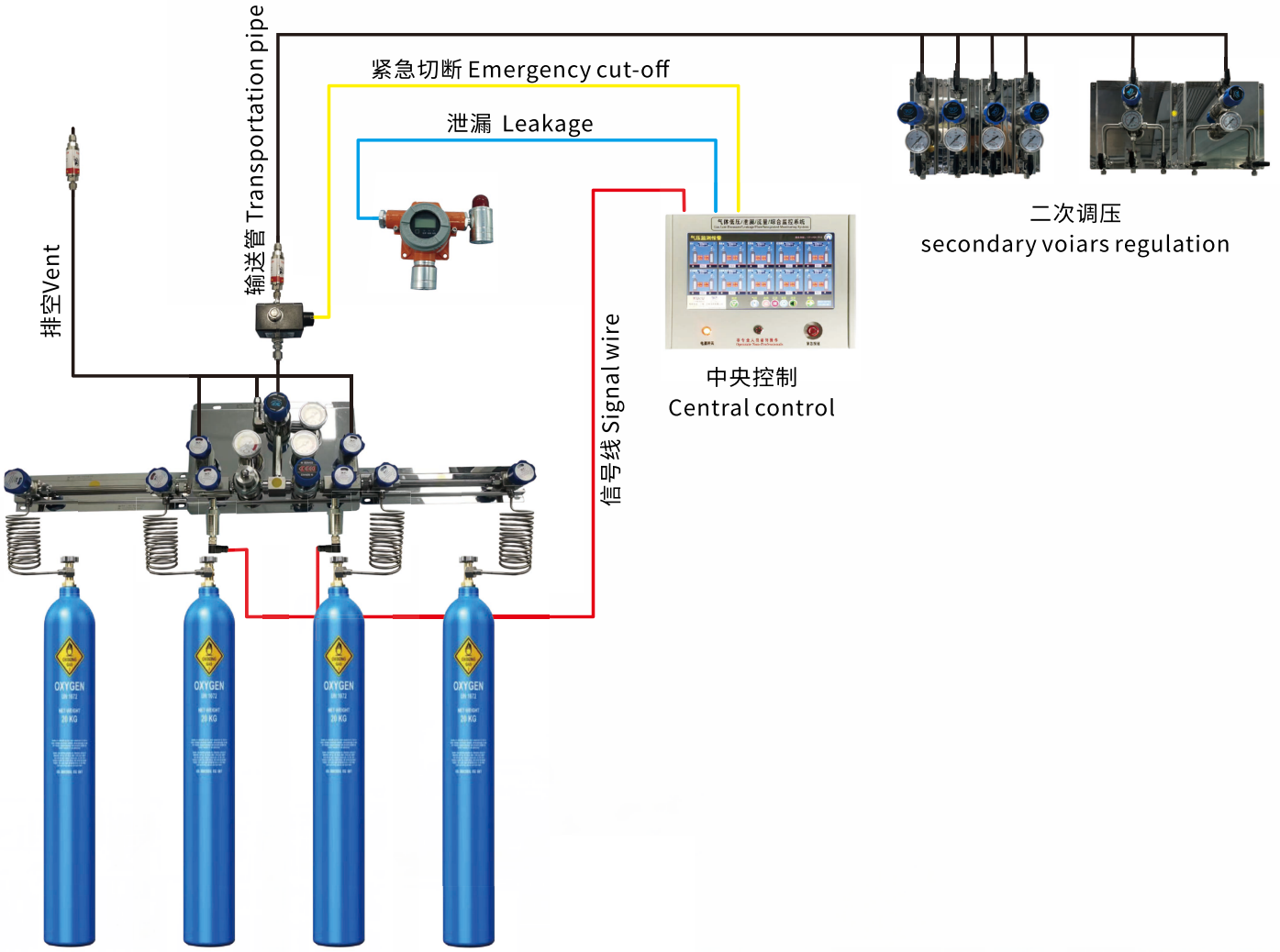

集中供气流程图

Centralized gas supply process flow diagram

实验室系列

Laboratory series

TKF®
TK-FULIQUN
半自动切换系统



二级减压阀TKF-7

Secondary pressure reducing valve TKF-7



二级减压阀 TKF-7
Secondary pressure reducing valve TKF-7

结构特点 Featuros

- 单级式减压结构 Single-state Construction Regular
- 母体与膜片采用硬密封形式 Hard Seal Applied Between the Body And Diaphragm
- 母体螺纹End Connection：1/4"NPT(F)；压力表接口 Gage Connection: 1/4"NPT(F)
- 内部结构易吹扫 Easily Purged
- 内设双层过滤网 Double- deck Strainer
- 可采用面板或墙式安装 Panel Mounting Or Wall Mounting

材料结构 Materats Of Constructlon

- 母 体 Body:S8316L,
- 上盖 Bonnot:SS304,
- 阀 座 Valve Seat:PTFE,PCTFE,PEEK
- 膜 片 Diaphragm:SS316L

技术参数 Specifications

- 最大输入压力 Inlet pressure max.:500psig
- 输出压力 Outlet pressure:0~25psig,0~50psig,0~100psig,0~200psig
- 安全测试压力 Proof pressure:1.5倍的最大输入压力 1.5 Times Max inlet pressure
- 工作温度 Operating temperature:-40°C~+100°C
- 泄 漏 率 Leak rate:$2*10^{-8}$ atm cc/sec He
- CV:1.0
- 重量 Weight:0.6kg

订购指南 Order Information

基本型号 Basic Ordering Number	母体材质 Body Materials	进 气 形 式 Inlet Connection	出气形式 Outlet Cnnnection	选项 Options
TKF-7	L:SS316L	00:1/4"NPT(F)	00:1/4"NPT(F)	可选择带底板 Available as an option with a base plate. (TKF-7-BP)
		01:1/4"NPT(M)	01:1/4"NPT(M)	
		10:1/8"卡套接头 Tube Fitting	10:1/8"卡套接头 Tube Fitting	
		11:1/4"卡套接头 Tube fitting	11:1/4"卡套接头 Tube fitting	
		12:3/8"卡套接头 Tube Fitting	12:3/8"卡套接头 Tube Fitting	
		15:6mm卡套接头 Tube Fitting	15:6mm卡套接头 Tube Fitting	
		16;8mm卡套接头 Tube Fitting	16;8mm卡套接头 Tube Fitting	
		17:10mm卡套接头 Tube Fitting	17:10mm卡套接头 Tube Fitting	
		18:12mm卡套接头 Tube Fitting	18:12mm卡套接头 Tube Fitting	
		74:M8×1mm接头Screw thread	74:M8×1mm接头Screw thread	
		其它形式接头可供选择 Other Options	其它形式接头可供选择 Other Options	

一级减压阀TKF-8

First stage pressure reducing valveTKF-8



一级减压阀 TKF-8
First stage pressure reducing valve-8

结构特点 Featuros

- 活塞式减压结构 Piston type pressure reducing structure
- 母体螺纹End Connection：1/4"NPT(F) 压力表接口 Gage Connection: 1/4"NPT(F)
- 可采用面板或墙式安装 Panel Mounting Or Wall Mounting

材料结构 Materats Of Constructlon

- 母 体 Body:S8316L
- 上 盖 Bonnot:SS304
- O型圈 O-ring:Viton
- 垫 片 Valve seat:Pctfe,Peek
- 膜 片哈氏合金或活塞式（可选配）Diaphragm: Hastelloy or Piston type optional

技术参数 Specifications

- 最大输入压力 Inlet pressure max.:3000psig
- 输出压力 Outlet pressure:0~25psig,0~50psig,0~100psig,
  0~200psig,0~250psig,0~500psig,0~1000psig
- 安全测试压力 Proof pressure:1.5倍的最大输入压力 1.5 Times Max inlet pressure
- 工作温度 Operating temperature:-40℃~+100℃
- 泄 漏 率 Leak rate:$2*10^{-8}$ atm cc/sec He
- CV:0.15
- 重量 Weight:0.8kg

流量曲线图 Flow curve

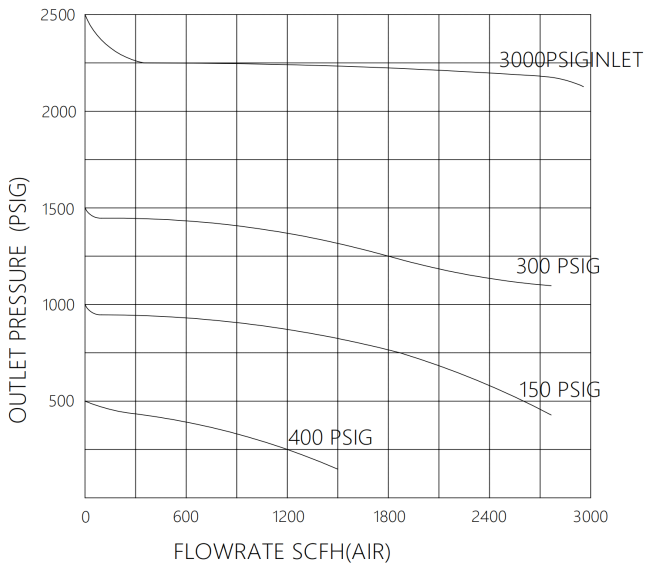

一级减压阀TKF-8

First stage pressure reducing valve TKF-8

安装尺寸图 Installation dimension drawing

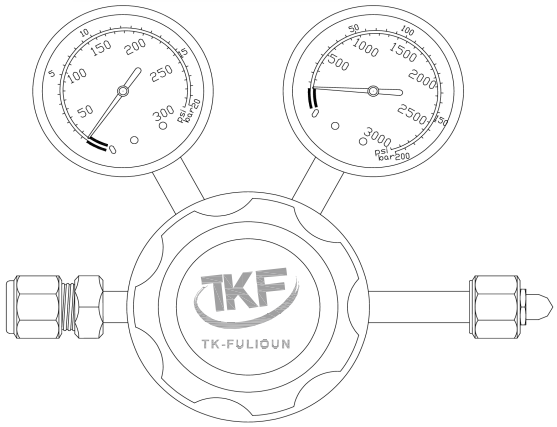

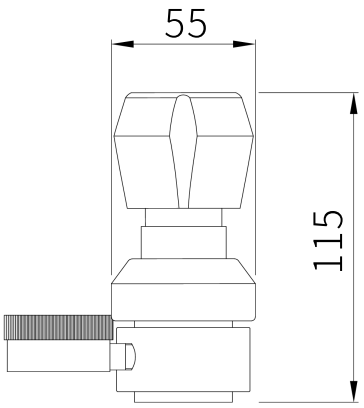

端口配置 Porting Configuration

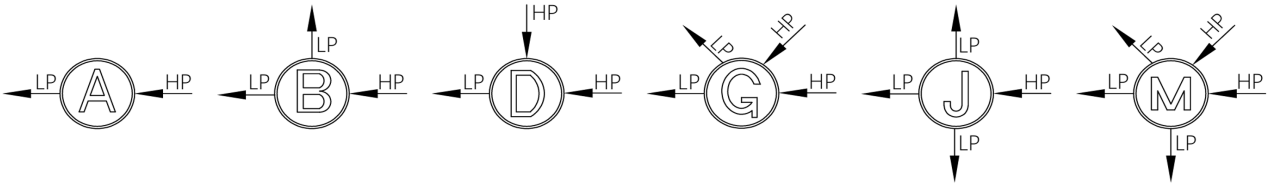

订购指南 Order Information							
选型序列举例 EX:TKF-8	A	D –	G	– G	– 00	– 00	– P
基本型号 Basic Ordering Number	母体材质 Body Materials	母体孔位配置 Body Ports configuration	输入压力 Inlet Pressure	输出压力 Outlet Pressure	进气形式 Inlet Connection	出气形式 Outlet Cnnnection	选项 Options
TKF-8	L:SS316L	A	E:0-3000psig	G:附压力表 Gauge	23:CGA330	00:1/4"NPT(F)	可选择带底板 (TKF-8-BP) Available as an option with a base plate. (TKF-8-BP)
			F:0-2000psig	(MPa)	24:CGA350	01:1/4"NPT(M)	
			G:0~500psig	P:附压力表 Gauge	27:CGA580	10:1/8"卡套接头 Tube Fitting	
				(psi/bar)	28;CGA660	11:1/4"卡套接头 Tube fitting	
				W:无压力表 None Gauge	30;CGA590	12:3/8"卡套接头 Tube Fitting	
					52:G5/8"- RH(F)	15:6mm卡套接头 Tube Fitting	
					63:W21.8-14RH(F)	16;8mm卡套接头 Tube Fitting	
					64:W21.8-14LH(F)	17:10mm卡套接头 Tube Fitting	
					其它形式接头可供选择 Other Options	18:12mm卡套接头 Tube Fitting	
						74:M8×1mm接头 Screw thread	
						其它形式接头可供选择 Other Options	

半自动切换系列 TKF-1

Semi-automatic switching series TKF-1



半自动切换系列 TKF-1
Semi-automatic switching series TKF-1

结构特点 Features

◆采用特气双级式减压器Adopt Bipolar Regulator Configuration
◆膜片阀旋钮，带开关指示窗Indicating Dial design, Visual indication of valve position。
◆可选配置安全阀Relief Valve Optional
◆可采用汇流管具扩展性Configurable Bus-bar Expanded
◆采用墙式安装Wall Mounting
◆可选配压力报警装置Optional pressure alarm device
◆可选配压力表可拆卸式Easy to disassemble pressure gauge structure

材料结构 Materials Of Construction

◆减压器母体 Regulator Body:SS316L
◆减压器垫片Regulator Gasket:PTFE,PCTFE,PEEK
◆膜片阀母体 Diaphragm Valve Body:SS316L
◆膜片Diaphragm:哈氏合金或活塞式Hastelloy Or Piston(可选配Optional)

技术参数 Specifications

◆最大输入压力Inlet Pressure max:3000psig
◆输出压力Outlet Pressure:0-25psig,0-50psig,0-100psig,0-250psig
◆安全测试压力 Proof pressure:1.5倍的最大输入压力 1.5Times Max.Inlet Pressure
◆适用温度Operating temperature:-40°C~+100°C
◆减压器泄漏率Regulator Leak rate:$2*10^{-8}$ atm cc/sec He
◆CV:0.08

流量曲线图
Flow Data

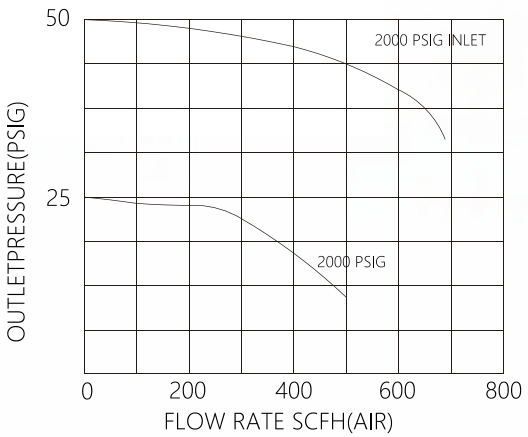

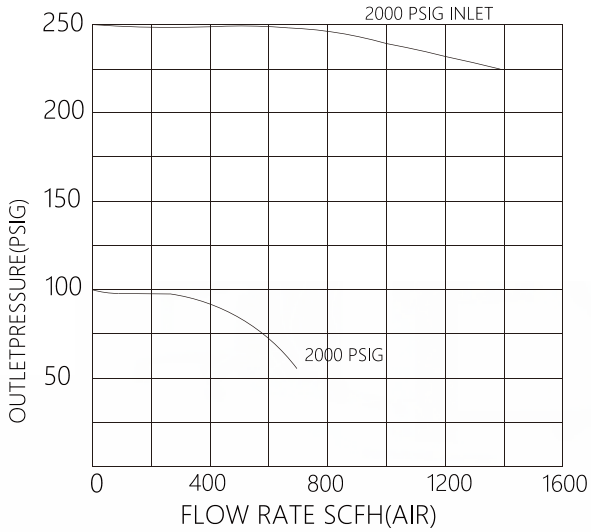

半自动切换系列 TKF-1

Semi-automatic switching series TKF-1

安装尺寸图
Dimensions

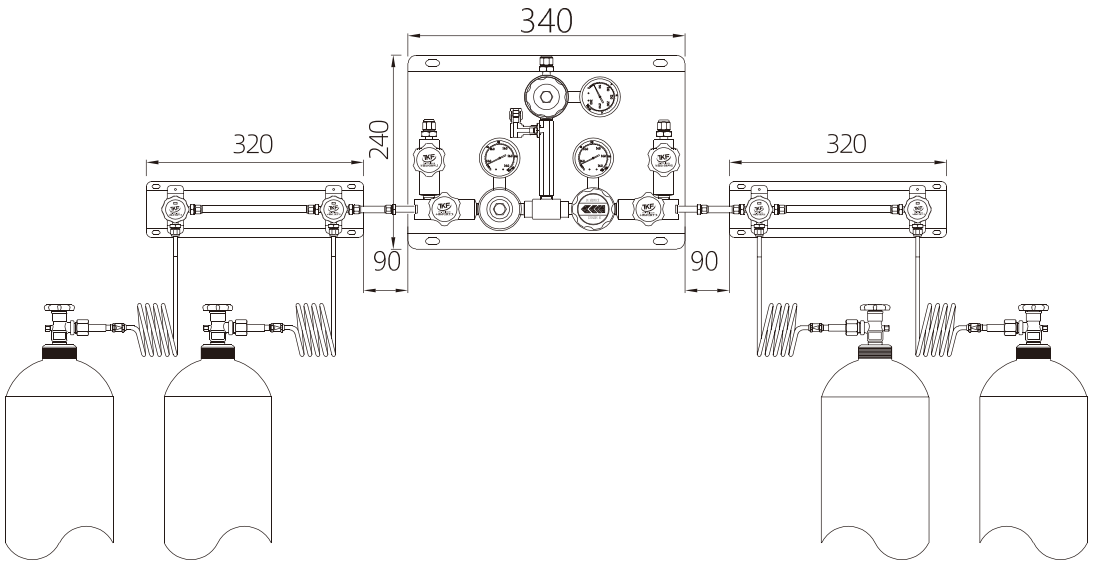

订购指南 Order Information							
选型序列举例 Typical Ordering Number EX:TKF-1	T	D	G	G	00	00	A
基本型号 Basic Ordering Number	母体材质 Body Materials	输入压力 Inlet pressure	输出压力 Outlet pressure	压力表 Gauge	进 气 形 式 Inlet Connection	出气形式 Outlet Cnnnection	选项 Options
TKF-1	T:SUS316L	D:3000ps	G:0-250psi	G:附压力表 Gauge (Mpa)	00:1/4"NPT(F)	00:1/4"NPT(F)	A:远程报警 Remote alarm
		X:2000psi	L:0-100psi	P:附压力表 Gauge (psi)	01:1/4"NPT(M)	01:1/4"NPT(M)	B:高压软管 High pressure hose
		F:500psi	K:0-50psi			2:1/4"卡套连接 Tube Fitting	C:高压硬管 Tubing
			M:0-25ps			4:3/8"卡套连接 Tube Fitting	D:阻火器 Flashback Arrestor
			H:0-15ps			6:1/2"卡套连接 Tube Fitting	E:安全阀 Relief Valve
						8:6mm"卡套连接 Tube Fitting	
						10:8mm"卡套连接 Tube Fitting	
					其它形式接头可供选择 Other options.	其它形式接头可供选择 Other options.	

半自动切换系列 TKF-2

Semi-automatic switching series TKF-2



半自动切换系列-TKF-2
Semi-automatic switching series TKF-2

结构特点 Features

◆采用特气双级式减压器Adopt Bipolar Regulator Configuration of valve position。
◆膜片阀旋钮，带开关指示窗Indicating Dial design, Visual indication
◆可选配置安全阀 Relief Valve Optional
◆可采用汇流管具扩展性Configurable Bus-bar Expanded
◆采用墙式安装Wall Mounting
◆可选配压力报警装置Optional pressure alarm device
◆可选配压力表可拆卸式Easy to disassemble pressure gauge structure

材料结构 Materials Of Construction

◆减压器母体 Regulator Body:SS316L
◆减压器垫片 Regulator Gasket:PTFE,PCTFE,PEEK
◆膜片阀母体Diaphragm Valve Body:SS316L
◆膜片Diaphragm:哈氏合金或活塞式Hastelloy Or Piston (可选配Optional)

技术参数 Specifications

◆最大输入压力Inlet Pressure max:3000psig
◆输出压力Outlet Pressure:0-25psig,0-50psig,0-100psig, 0-250psig
◆安全测试压力 Proof pressure:1.5倍的最大输入压力 1.5Times Max.Inlet Pressure
◆适用温度Operating temperature:-40°C~+100°C

流量曲线图
Flow Data

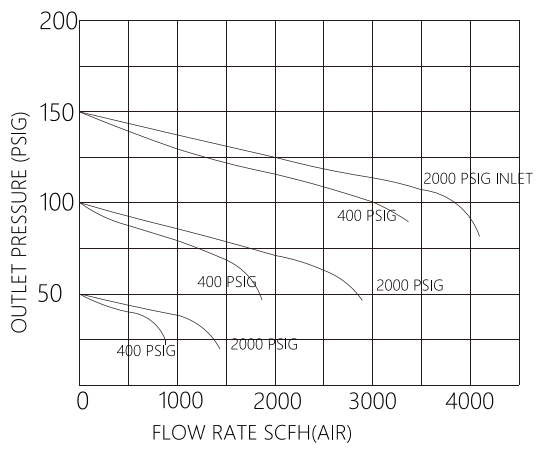

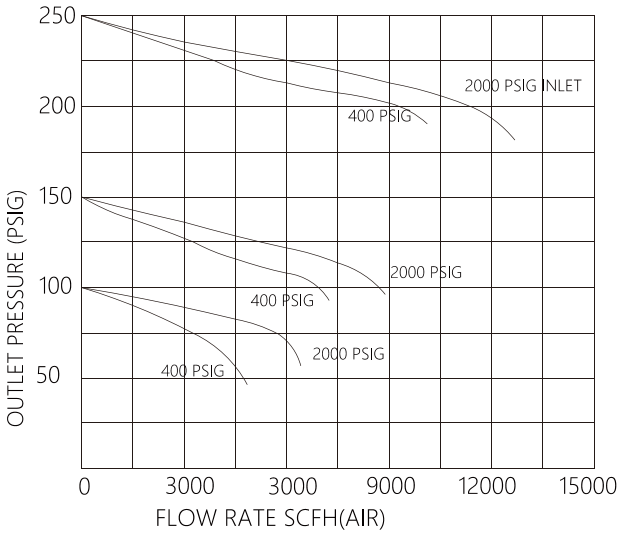

半自动切换系列 TKF-2

Semi-automatic switching series TKF-2

安装尺寸图
Dimensions

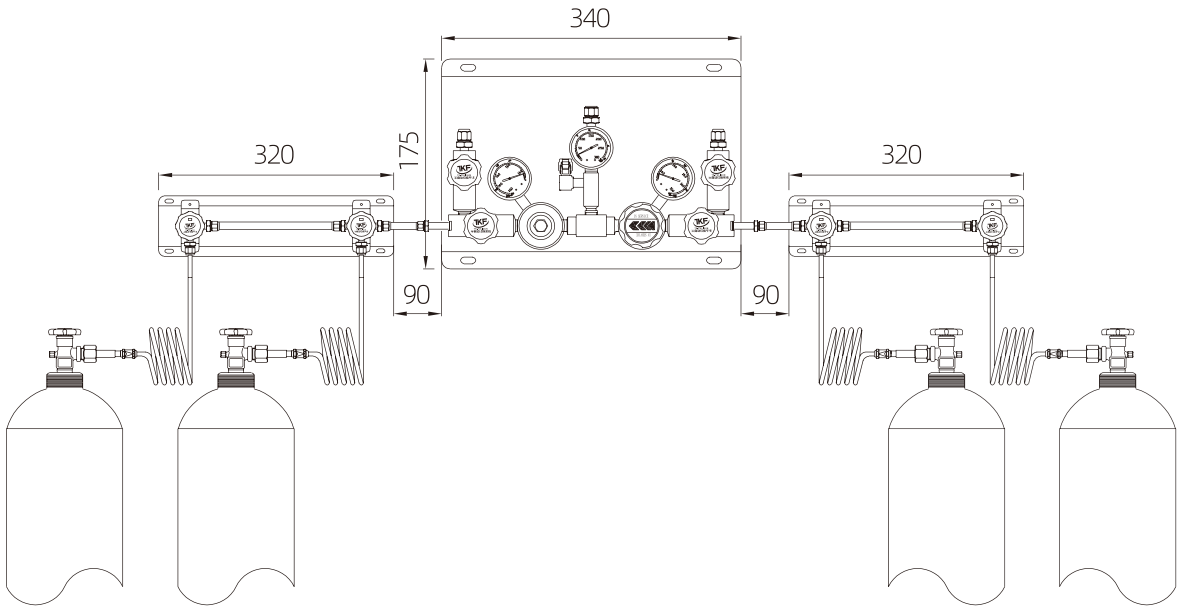

订购指南 Order Information							
选型序列举例 Typical Ordering Number EX:TKF-2	T	D	G	G	00	00	A
基本型号 Basic Ordering Number	母体材质 Body Materials	输入压力 Inlet pressure	输出压力 Outlet pressure	压力表 Gauge	进 气 形 式 Inlet Connection	出气形式 Outlet Cnnnection	选项 Options
TKF-2	T:SUS316L	D:3000ps	G:0-250psi	G:附压力表 Gauge (Mpa)	00:1/4"NPT(F)	00:1/4"NPT(F)	A:远程报警 Remote alarm
		X:2000psi	L:0-100psi	P:附压力表 Gauge (psi)	01:1/4"NPT(M)	01 :1/4"NPT(M)	B:高压软管High pressure hose
		F:500psi	K:0-50psi			2:1/4"卡套连接 Tube Fitting	C:高压硬管 Tubing
			M:0-25ps			4:3/8"卡套连接 Tube Fitting	D:阻火器 Flashback Arrestor
			H:0-15ps			6:1/2"卡套连接 Tube Fitting	E:安全阀 Relief Valve
						8:6mm"卡套连接 Tube Fitting	
						10:8mm"卡套连接 Tube Fitting	
					其它形式接头可供选择 Other options.	其它形式接头可供选择 Other options.	

手动切换系列 TKF-1-1B

Manual Switching series TKF-1-1B



手动切换系列 TKF-1-1B
Manual Switching series TKF-1-1B

结构特点 Features

◆采用特气双级式减压器Adopt Single-state Regulator Configuration
◆膜片阀旋钮，带开关指示窗Indicating Dial design,
Visual indication of valve position。
◆可选配置安全阀 Relief Valve Optional
◆可采用汇流管具扩展性Configurable Bus-bar Expanded
◆采用墙式安装Wall Mounting
◆可选配压力报警装置Optional pressure alarm device
◆可选配压力表可拆卸式Easy to disassemble pressure gauge structure

材料结构 Materials Of Construction

◆减压器母体 Regulator Body :SS316L
◆减压器垫片 Regulator gasket:PTFE,PCTFE,PEEK
◆膜片阀母体Diaphragm Valve Body:SS316L
◆膜片Diaphragm: 哈氏合金或活塞式Hastelloy Or Piston(可选配Optional)

技术参数 Specifications

◆最大输入压力Inlet Pressure max:3000psig
◆输出压力Outlet Pressure:0-15psi,0-25psig,0-50psig,0-100psig,0-250psig
◆安全测试压力Proof Pressure:1.5倍的最大输入压力
1.5Times Max.Inlet Pressure
◆适用温度Operating temperature:-40°C~+100°C
◆减压器泄漏率 Regulator Leak rate:$2*10^{-8}$atm cc/sec He
◆CV:0.08

流量曲线图
Flow Data

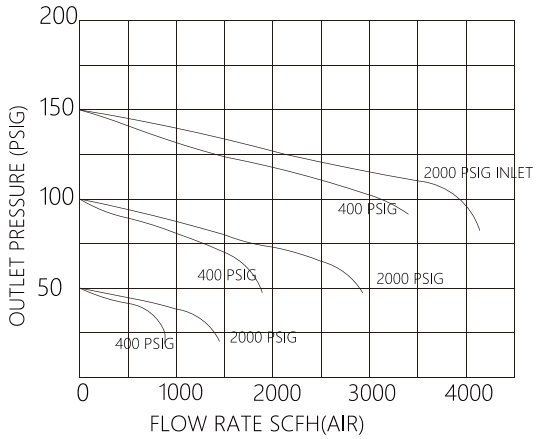

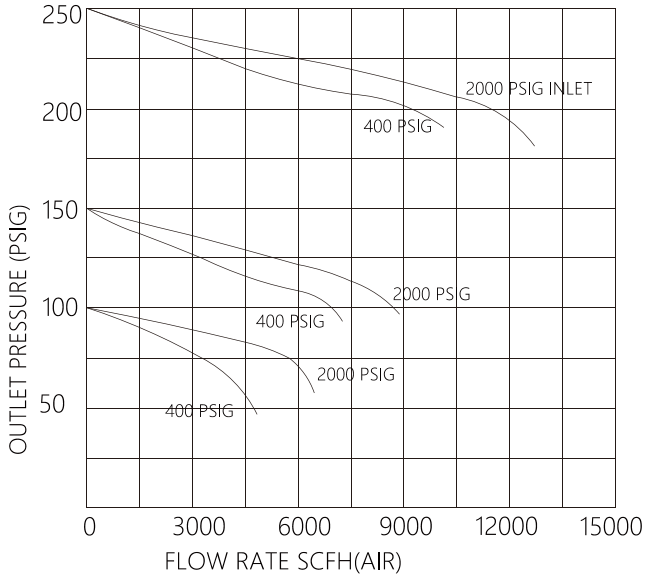

手动切换系列 TKF-1-1B

Manual Switching series TKF-1-1B

安装尺寸图
Dimensions

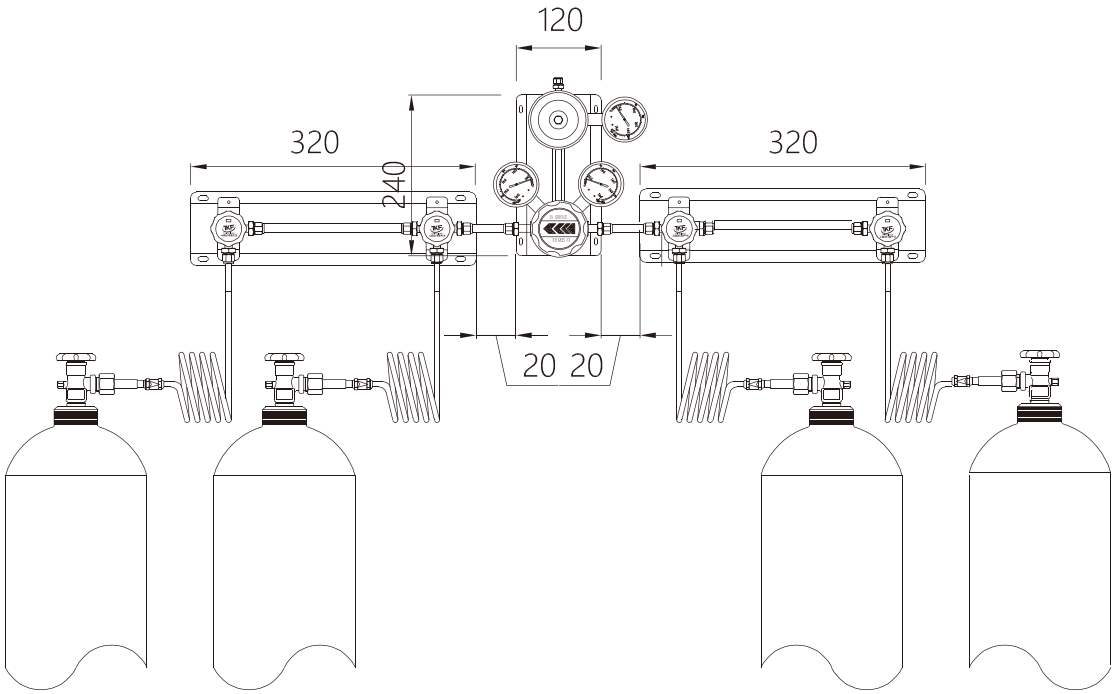

订购指南 Order Information							
选型序列举例 Typical Ordering Number EX:TKF-1-1B	T	D	G	G	00	00	A
基本型号 Basic Ordering Number	母体材质 Body Materials	输入压力 Inlet pressure	输出压力 Outlet pressure	压力表 Gauge	进气形式 Inlet Connection	出气形式 Outlet Cnnnection	选项 Options
TKF-1-1B	T:SUS316L	D:3000ps	G:0-250psi	G:附压力表 Gauge (Mpa)	00:1/4"NPT(F)	00:1/4"NPT(F)	A:远程报警 Remote alarm
		X:2000psi	L:0-100psi	P:附压力表 Gauge (psi)	01:1/4"NPT(M)	01:1/4"NPT(M)	B:高压软管High pressure hose
		F:500psi	K:0-50psi			2:1/4"卡套连接 Tube Fitting	C:高压硬管 Tubing
			M:0-25psi			4:3/8"卡套连接 Tube Fitting	D:阻火器 Flashback Arrestor
			H:0-15psi			6:1/2"卡套连接 Tube Fitting	E:安全阀 ReliefValve
						8:6mm"卡套连接 Tube Fitting	
						10:8mm"卡套连接 Tube Fitting	
					其它形式接头可供选择 Other options.	其它形式接头可供选择 Other options.	

单侧供气系列 TKF-3

Single sided supply gas control panel series TKF-3



单侧供气系列 TKF-3
Single sided supply gas control panel series TKF-3

结构特点 Features

◆采用单级式减压器 Adopt Single-state Regulator Configuration
◆膜片阀旋钮，带开关指示窗Indicating Dial design, Visual indication of valve position
◆内部结构方便吹扫 Easily Purged to maintain clean operation
◆可采用汇流管具扩展Configurable Bus-bar Expanded
◆采用墙式安装Wall Mounting
◆可选配压力报警装置Optional pressure alarm device
◆可选配压力表可拆卸式Optional diaassembly pressure gauge

材料结构 Materials Of Construction

◆减压器母体 Regulator Body:SS316L
◆减压器垫片 Regulator gasket:PTFE,PCTFE,PEEK
◆膜片阀母体Diaphragm Valve Body:SS316L
◆膜片 Diaphragm: 哈氏合金或活塞式Hastelloy Or Piston(可选配Optional)

技术参数 Specifications

◆最大输入压力Inlet Pressure max:3000psig
◆输出压力Outlet Pressure:0-15psi,0-25psig,0-50psig,0-100psig,0-250psig
◆安全测试压力Proof Pressure:1.5倍的最大输入压力 1.5Times Max.Inlet Pressure
◆适用温度Operating temperature:-40°C~+100°C
◆减压器泄漏率 Regulator Leak rate:$2*10^{-8}$atm cc/sec He
◆CV:0.08

流量曲线图
Flow Data

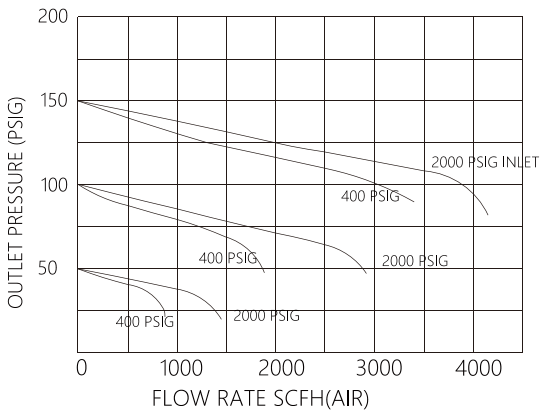

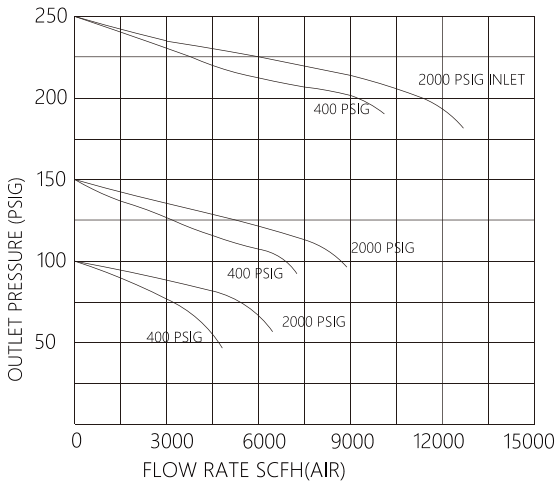

单侧供气系列 TKF-3

Single sided supply gas control panel series TKF-3

安装尺寸图
Dimensions

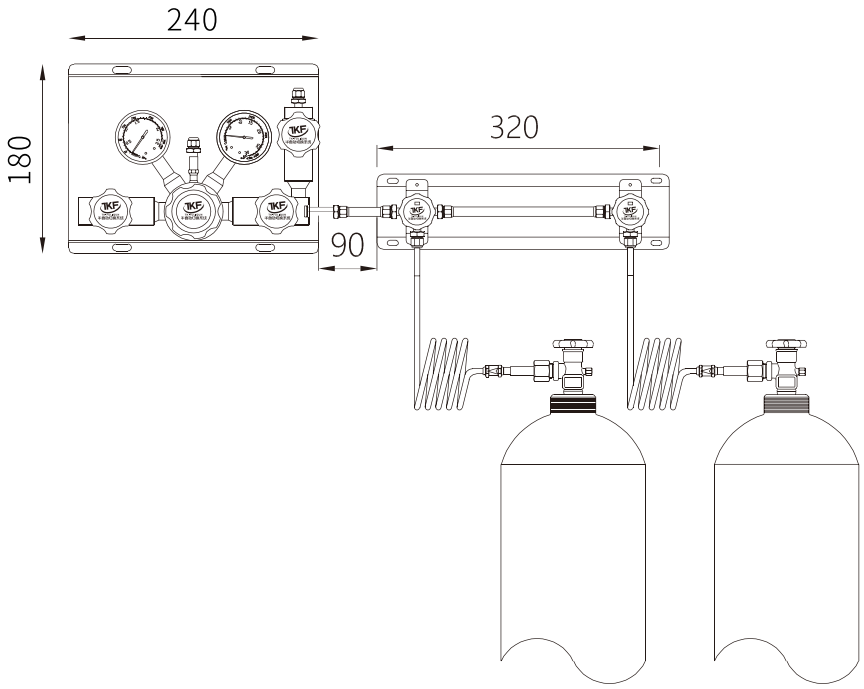

订购指南 Order Information							
选型序列举例 Typical Ordering Number EX:TKF-3	T	D	G	G	00	00	A
基本型号 Basic Ordering Number	母体材质 Body Materials	输入压力 Inlet pressure	输出压力 Outlet pressure	压力表 Gauge	进气形式 Inlet Connection	出气形式 Outlet Cnnnection	选项 Options
TKF-3	T:SUS316L	D:3000ps	G:0-250psi	G:附压力表 Gauge (Mpa)	00:1/4"NPT(F)	00:1/4"NPT(F)	A:远程报警 Remote alarm
		X:2000psi	L:0-100psi	P:附压力表 Gauge (psi)	01:1/4"NPT(M)	01:1/4"NPT(M)	B:高压软管 High pressure hose
		F:500psi	K:0-50psi			2:1/4"卡套连接 Tube Fitting	C:高压硬管 Tubing
			M:0-25ps			4:3/8"卡套连接 Tube Fitting	D:阻火器 Flashback Arrestor
			H:0-15ps			6:1/2"卡套连接 Tube Fitting	E:安全阀 Relief Valve
						8:6mm"卡套连接 Tube Fitting	
						10:8mm"卡套连接 Tube Fitting	
					其它形式接头可供选择 Other options.	其它形式接头可供选择 Other options.	

双侧手动切换系列 TKF-1-9

Dual-Sided manual switching series TKF-1-9



双侧手动切换系列TKF-1-9
Dual-Sided manual switching series TKF-1-9

结构特点 Features

◆采用一级式减压器Adopt Single-state Regulator Configuration
◆膜片阀旋钮，带开关指示窗Indicating Dial design, Visual indication of valve position
◆内部结构方便吹扫 Easily Purged to maintain clean operation
◆可采用汇流管具扩展Configurable Bus-bar Expanded
◆采用墙式安装Wall Mounting
◆可选配压力报警装置Optional pressure alarm device
◆可选配压力表可拆卸式Easy to disassemble pressure gauge structure

材料结构 Materials Of Construction

◆减压器母体 Regulator Body:SS316L
◆减压器垫片Regulator gasket:PTFE,PCTFE,PEEK
◆膜片阀母体Diaphragm Valve Body:SS316L
◆膜片 Diaphragm: 哈氏合金或活塞式Hastelloy Or Piston(可选配Optional)

技术参数 Specifications

◆最大输入压力Inlet Pressure max:3000psig
◆输出压力Outlet Pressure:0-15psi,0-25psig,0-50psig,0-100psig, 0-250psig
◆安全测试压力Proof Pressure:1.5倍的最大输入压力 1.5 times maximum inlet Pressure
◆适用温度Operating temperature:-40°C~+100°C
◆减压器泄漏率 Regulator Leak rate:$2*10^{-8}$atm cc/sec He
◆CV:0.08

流量曲线图
Flow Data

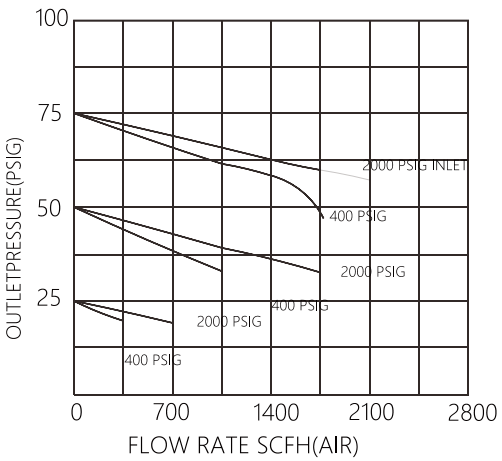

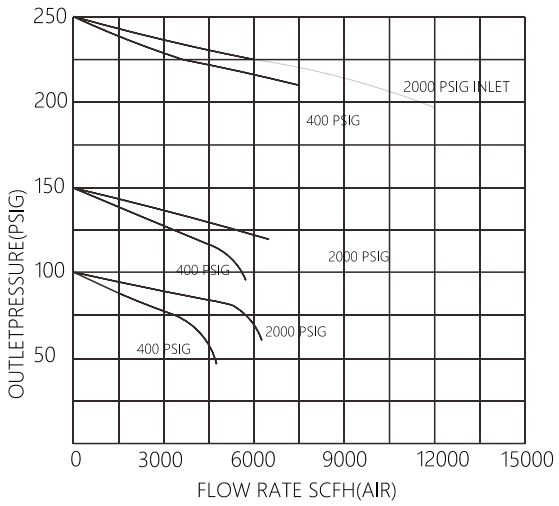

双侧手动切换系列 TKF-1-9

Dual-Sided manual switching series TKF-1-9

安装尺寸图
Dimensions

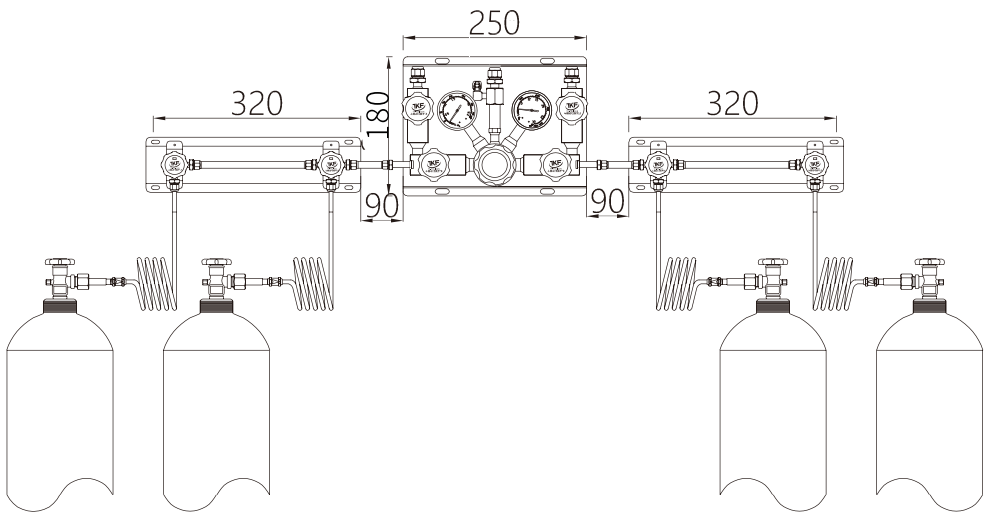

订购指南 Order Information

选型序列举例 Typical Ordering Number EX:TKF-9	T	D	G	G	00	00	A
基本型号 Basic Ordering Number	母体材质 Body Materials	输入压力 Inlet pressure	输出压力 Outlet pressure	压力表 Gauge	进气形式 Inlet Connection	出气形式 Outlet Cnnnection	选项 Options
TKF-9	T:SUS316L	D:3000ps	G:0-250psi	G:附压力表 Gauge(Mpa)	00:1/4"NPT(F)	00:1/4"NPT(F)	A:远程报警 Remote alarm
		X:2000psi	L:0-100psi	P:附压力表 Gauge(psi)	01:1/4"NPT(M)	01 :1/4"NPT(M)	B:高压软管High pressure hose
		F:500psi	K:0-50psi			2:1/4"卡套连接 Tube Fitting	C:高压硬管 Tubing
			M:0-25psi			4:3/8"卡套连接 Tube Fitting	D:阻火器 Flashback Arrestor
			H:0-15psi			6:1/2"卡套连接 Tube Fitting	E:安全阀 Relief Valve
						8:6mm"卡套连接 Tube Fitting	
						10:8mm"卡套连接 Tube Fitting	
					其它形式接头可供选择 Other options.	其它形式接头可供选择 Other options.	

半自动切换系列 TKF-2-2A

Semiautomatic transfer switch series TKF-2-2A



半自动切换系列 TKF-2-2A

Semiautomatic transfer switch series
TKF-2-2A

结构特点 Features

◆采用特气双级式减压器Adopt Bipolar Regulator Configuration
◆膜片阀旋钮，带开关指示窗Indicating Dial design, Visual indication of valve position。
◆可选配置安全阀 Relief Valve Optional
◆可采用汇流管具扩展性 Configurable Bus-bar Expanded
◆采用墙式安装 Wall Mounting
◆可选配压力报警装置 Optional pressure alarm device
◆可选配压力表可拆卸式 Easy to disassemble pressure gauge structure

材料结构 Materials Of Construction

◆减压器母体Regulator Body:SS316L
◆减压器垫片Regulator Gasket:PTFE,PCTFE,PEEK
◆膜片阀母体Diaphragm Valve Body:SS316L
◆膜片Diaphragm: 哈氏合金或活塞式Hastelloy Or Piston(可选配Optional)

技术参数 Specifications

◆最大输入压力Inlet Pressure max:3000psig inlet pressure
◆输出压力Outlet Pressure:0-15psi,0-25psig,0-50psig,0-100psig, 0-250psig
◆安全测试压力Proof Pressure:1.5倍的最大输入压力 1.5Times Max.Inlet Pressure
◆适用温度Operating temperature:-40°C~+100°C
◆减压器泄漏率Regulator Leak rate:2*10^{-8} atm cc/sec He
◆CV:0.08

流量曲线图

Flow Data

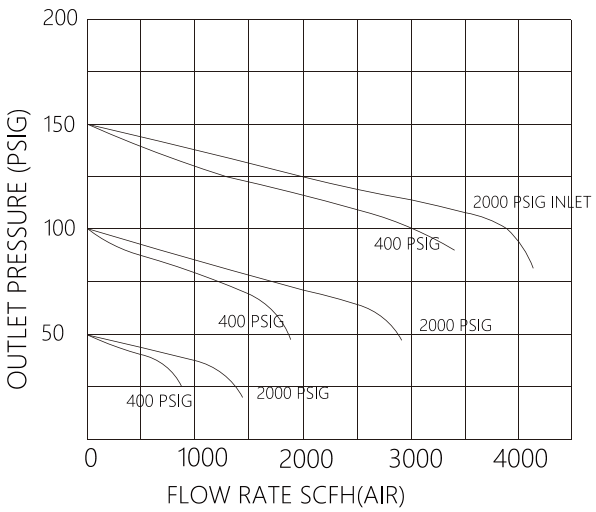

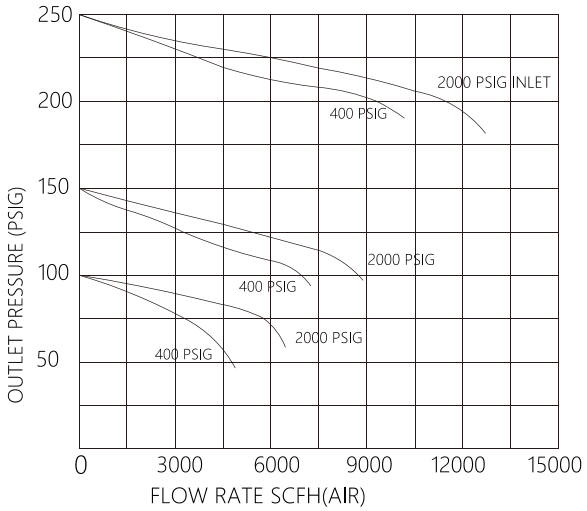

半自动切换系列 TKF-2-2A

Semiautomatic transfer switch series TKF-2-2A

安装尺寸图
Dimensions

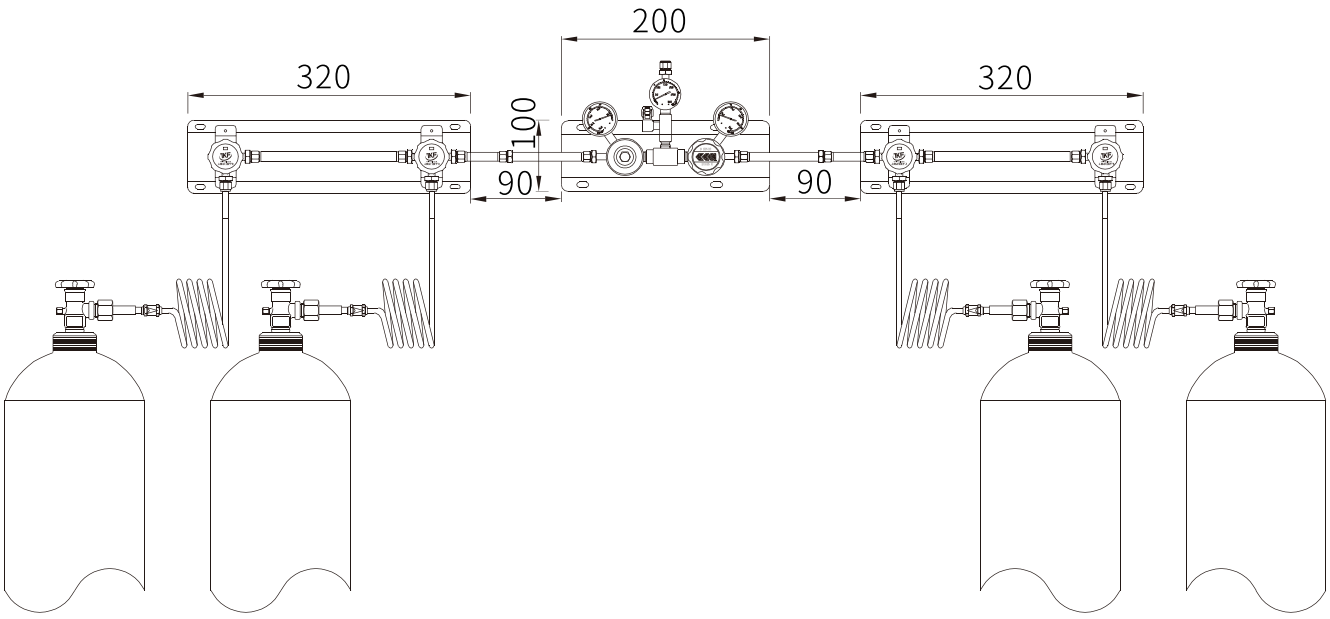

订购指南 Order Information							
选型序列举例 Typical Ordering Number EX:TKF-2-2A	T	D	G	G	00	00	A
基本型号 Basic Ordering Number	母体材质 Body Materials	输入压力 Inlet pressure	输出压力 Outlet pressure	压力表 Gauge	进 气 形 式 Inlet Connection	出气形式 Outlet Cnnnection	选项 Options
TKF-2-2A	T:SUS316L	D:3000ps	G:0-250psi	G:附压力表 Gauge (Mpa)	00:1/4"NPT(F)	00:1/4"NPT(F)	A:远程报警 Remote alarm
		X:2000psi	L:0-100psi	P:附压力表 Gauge (psi)	01:1/4"NPT(M)	01 :1/4"NPT(M)	B:高压软管 High pressure hose
		F:500psi	K:0-50psi			2:1/4"卡套连接 Tube Fitting	C:高压硬管 Tubing
			M:0-25psi			4:3/8"卡套连接 Tube Fitting	D:阻火器 Flashback Arrestor
			H:0-15psi			6:1/2"卡套连接 Tube Fitting	E:安全阀 Relief Valve
						8:6mm"卡套连接 Tube Fitting	
						10:8mm"卡套连接 Tube Fitting	
					其它形式接头可供选择 0ther options.	其它形式接头可供选择 0ther options.	

气体控制终端系列 TKF-5

Terminal gas control panel series TKF-5

墙面式 (轴向终端)
Wall-mounted (axial terminal)



气体控制终端系列 TKF-5
Terminal gas control panel series TKF-5

结构特点 Features

◆采用特气单级式TKF-5减压器(组合式) Single-state Regulator Assembly
◆经耐压测试及氦气泄漏检测 Pressure resistance test and helium leak detection
◆2”不锈钢压力表，判读清晰 2”Stainless steel pressure gauge,Easy to read data
◆采用墙式安装或面板安装 Wall Mount or panel Mount

材料结构 Materials Of Construction

◆减压器母体 Regulator Body :SS316L
◆减压器垫片 Regulator Gasket:PTFE,PCTFE,PEEK
◆球阀母体 Ball valve Body:SS316L
◆接管路 End connection:1/4”SS316LTUBE fitting
◆膜片Diaphragm:哈氏合金 Hastelloy

技术参数 Specifications

◆最大输入压力Inlet Pressure max:500psig
◆输出压力Outlet Pressure:0-15psig,0-25psig,0-50psig,0-100psig,0-250psig
◆适用温度Operating temperature:-40°°C~+100°C
◆减压器泄漏率Regulator Leak rate:2*10^{-8}atm cc/sec He

安装尺寸图
Dimensions

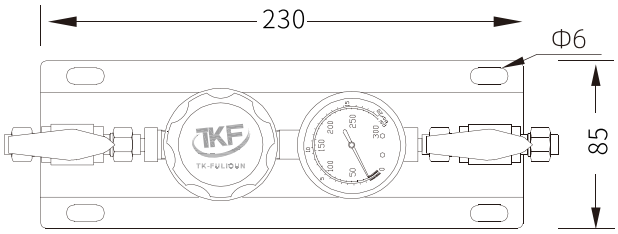

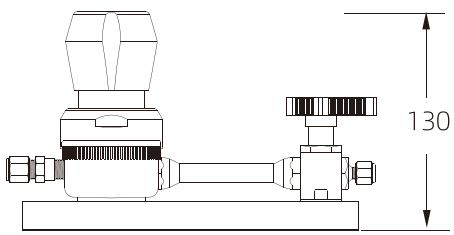

订购指南 Order Information							
选型序列举例 Typical Ordering Number EX:TKF-5	T	D	G	G	00	00	A
基本型号 Basic Ordering Number	母体材质 Body Materials	输入压力 Inlet pressure	输出压力 Outlet pressure	压力表 Gauge	进气形式 Inlet Connection	出气形式 Outlet Cnnnection	选项 Options
TKF-5	T:SUS316L	D:500psi	G:0-250psi	G:附压力表 Gauge (Mpa)	A:1/4"卡套 Tube Fitting	A:1/4"卡套 Tube Fitting	A:一进一出 One in one out
		H:300ps	L:0-100psi	P:附压力表 Gauge (psi)	B:3/8"卡套 Tube Fitting	B:3/8"卡套 Tube Fitting	B:一进二出 One in two out
		I:200psi	K:0-50psi		C:1/2"卡套 Tube Fitting	C:1/2"卡套 Tube Fitting	C:一进三出 One in three out
		X:150psi	M:0-25psi		D:3/4"卡套 Tube Fitting	D:3/4"卡套 Tube Fitting	
		F:50psi	H:0-15psi		E:1"卡套 Tube Fitting	E:1"卡套 Tube Fitting	
					其它形式接头可供选择 Other Options	其它形式接头可供选择 Other Options	

气体控制终端系列 TKF-5-1

Terminal gas control panel series TKF-5-1

墙面式 (轴向终端)
Wall-mounted (axial terminal)



气体控制终端系列 TKF-5-1
Terminal gas control panel series TKF-5-1

结构特点 Features

- ◆组装式减压结构 Assembled Regulator Construction
- ◆母体螺纹 End Connection：1/4”NPT(F)
- ◆可采用面板或墙式安装 Wall Mounting Or panel Mounting

材料结构 Materials Of Construction

- ◆母体Body:SS316L
- ◆上盖Bonnet:SS316L
- ◆垫片Gasket::PCTFE,PEEK
- ◆O型圈O-ring:Viton
- ◆膜片Diaphragm:哈氏合金Hastelloy

技术参数 Specifications

- ◆最大输入压力Inlet Pressure max:500psig
- ◆输出压力Outlet Pressure:0-25psig,0-50psig,0-100psig, 0-250psig
- ◆适用温度Operating temperature:-40°°C~+100°C
- ◆减压器泄漏率Regulator Leak rate:2*10^{-8}atm cc/sec He
- ◆CV:0.15

安装尺寸图
Dimensions

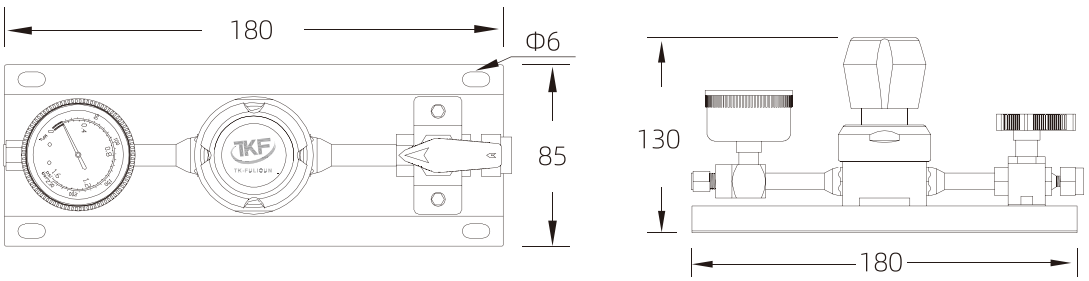

订购指南 Order Information

选型序列举例 Typical Ordering Number EX:TKF-5-1	T	D	G	G	00	00	A
基本型号 Basic Ordering Number	母体材质 Body Materials	输入压力 Inlet pressure	输出压力 Outlet pressure	压力表 Gauge	进 气 形 式 Inlet Connection	出气形式 Outlet Cnnnection	选项 Options
TKF-5-1	T:SUS316L	D:500psi	L:0-250psi	G:附压力表 Gauge (Mpa)	A:1/4"卡套 Tube Fitting	A:1/4"卡套 Tube Fitting	A:一进一出 One in one out
		H:300ps	L:0-100psi	P:附压力表 Gauge (psi)	B:3/8"卡套 Tube Fitting	B:3/8"卡套 Tube Fitting	B:一进二出 One in two out
		I:200psi	K:0-50psi		C:1/2"卡套 Tube Fitting	C:1/2"卡套 Tube Fitting	C:一进三出 One in three out
		X:150psi	M:0-25psi		D:3/4"卡套 Tube Fitting	D:3/4"卡套 Tube Fitting	
		F:50psi			E:1 "卡套 Tube Fitting	E:1 "卡套 Tube Fitting	
					其它形式接头可供选择 Other Options	其它形式接头可供选择 Other Options	

气体控制终端系列 TKF-5-2

Terminal gas control series TKF-5-2

桌面式
Desktop style



气体控制终端系列 TKF-5-2
Terminal gas control series TKF-5-2

结构特点 Features

◆采用单级式减压器，减压阀+球阀组合式结构Single-state Regulator,Ball Valce and Regulator Assembly
◆2”不锈钢压力表，判读清晰2”Stainless steel pressure gauge, Easy to read data
◆采用桌面式安装Desktop installation

材料结构 Materials Of Construction

◆减压器母体Regulator Body：SS316L
◆减压器垫片Regulator Gasket：PTFE,PCTFE,PEEK
◆球阀母体Ball valve Body：SS316L
◆接管路End connection：3/4"SS316LTUBE
◆膜片Diaphragm:哈氏合金Hastelloy

技术参数 Specifications

◆最大输入压力Inlet Pressure max:500psig
◆输出压力Outlet Pressure:0-25psig,0-50psig,0-100psig, 0-250psig
◆适用温度Operating temperature:-40°°C~+100°C
◆减压器泄漏率Regulator Leak rate:2*10^{-8}atm cc/sec He
◆CV:0.15

安装尺寸图
Dimensions

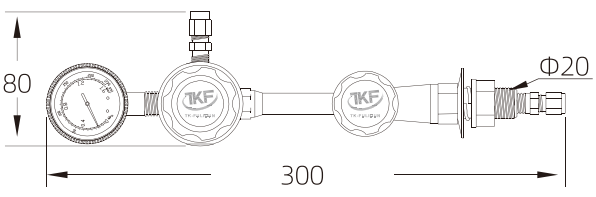

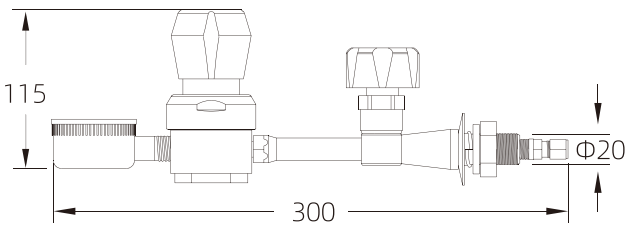

订购指南 Order Information

选型序列举例 Typical Ordering Number EX:TKF-5-2	T	D	G	G	00	00	A
基本型号 Basic Ordering Number	母体材质 Body Materials	输入压力 Inlet pressure	输出压力 Outlet pressure	压力表 Gauge	进 气 形 式 Inlet Connection	出气形式 Outlet Cnnnection	选项 Options
TKF-5-2	T:SUS316L	D:500psi	L:0-250psi	G:附压力表 Gauge (Mpa)	A:1/4" 卡套Tube Fitting	A:1/4" 卡套Tube Fitting	A:一进一出 One in one out
		H:300ps	L:0-100psi	P:附压力表 Gauge (psi)	B:3/8" 卡套Tube Fitting	B:3/8" 卡套Tube Fitting	
		I:200psi	K:0-50psi		C:1/2" 卡套Tube Fitting	C:1/2" 卡套Tube Fitting	
		X:150psi	M:0-25psi				
		F:50psi			其他连接方式可选择 Other options	其他连接方式可选择 Other options	

气体控制终端系列 TKF-5-3

Terminal gas control panel series TKF-5-3

墙面式（径向终端）
Wall-mounted (radial terminal)



气体控制终端系列 TKF-5-3
Terminal gas control panel series TKF-5-3

结构特点 Features

◆组装式减压结构 Assembled Regulator Construction
◆母体螺纹 End Connection：1/4”NPT(F)
◆可采用面板或墙式安装 Wall Mounting Or panel Mounting

材料结构 Materials Of Construction

◆母体Body:SS316L
◆上盖Bonnet:SS316L
◆垫片Gasket:PCTFE,PEEK
◆O型圈O-ring:Viton
◆膜片Diaphragm:哈氏合金Hastelloy

技术参数 Specifications

◆最大输入压力Inlet Pressure max.:500psig
◆输出压力Outlet Pressure:0-25psig,0-50psig,0-150psig, 0-250psig
◆安全测试压力Proof Pressure:1.5倍的最大输入压力 1.5Times Max.Inlet Pressure
◆适用温度Operating temperature:-40°C~+100°C
◆泄漏率Regulator Leak rate:$2*10^{-8}$atm cc/secHe
◆CV:0.19

安装尺寸图
Dimensions

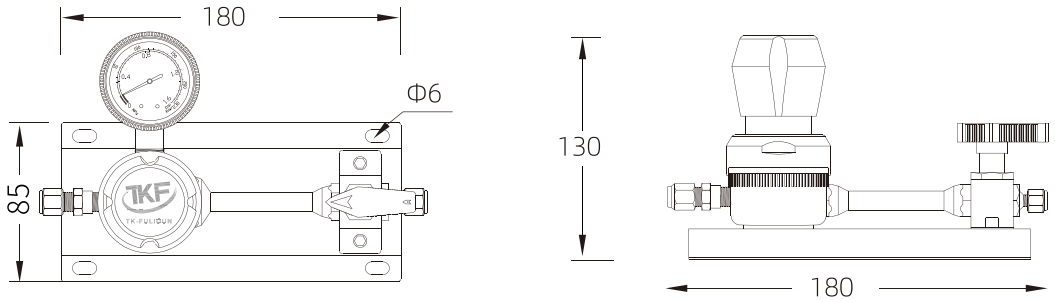

订购指南 Order Information

选型序列举例 Typical Ordering Number EX:TKF-5-3	T	D	G	G	00	00	A
基本型号 Basic Ordering Number	母体材质 Body Materials	输入压力 Inlet pressure	输出压力 Outlet pressure	压力表 Gauge	进气形式 Inlet Connection	出气形式 Outlet Cnnnection	选项 Options
TKF-5-3	T:SUS316L	D:500psi	L:0-250psi	G:附压力表 Gauge (Mpa)	A:1/4"卡套Tube Fitting	A:1/4"卡套Tube Fitting	A:一进一出 One in one out
		H:300ps	L:0-100psi	P:附压力表 Gauge (psi)	B:3/8"卡套Tube Fitting	B:3/8"卡套Tube Fitting	B:一进二出 One in two out
		I:200psi	K:0-50psi		C:1/2"卡套Tube Fitting	C:1/2"卡套Tube Fitting	C:一进三出 One in three out
		X:150psi	M:0-25psi		D:3/4"卡套Tube Fitting	D:3/4"卡套Tube Fitting	
		F:50psi			E:1"卡套Tube Fitting	E:1"卡套Tube Fitting	
					其他连接方式可选择 Other options	其他连接方式可选择 Other options	

气体控制终端系列 TKF-5-4

Terminal gas control series TKF-5-4

功能柱终端
Terminal of function column



气体控制终端系列 TKF-5-4
Terminal gas control series TKF-5-4

结构特点 Features

◆采用单级式减压器，减压阀+球阀组合式结构
Single-state Regulator Construction,Regulator+ Ball ValveAssembled Constructure
◆经耐压测试及氮气泄漏检测 Pressure resistance test and heliumleak detection
◆2”不锈钢压力表，判读清晰 2”Stainless steel pressure gauge,Easy to read data
◆采用功能柱安装Function column mounting

材料结构 Materials Of Construction

◆减压器母体：Regulator Body SS316L
◆减压器垫片Regulator Gasket：PTFE,PCTFE,PEEK
◆球阀母体： Ball Valve Body:SS316L Ball Body Material
◆接管路：Gas Line: 1/4"SS316LTUBE
◆膜片Diaphragm:哈氏合金Hastelloy

安装尺寸图
Dimensions

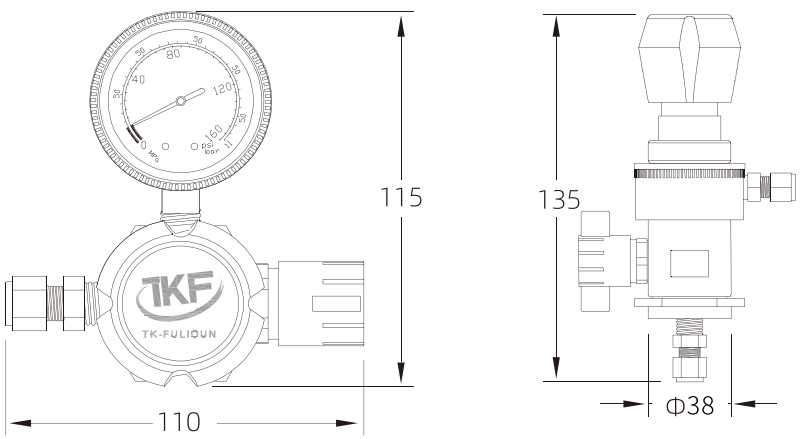

订购指南 Order Information

选型序列举例 Typical Ordering Number EX:TKF-5-4	T	D	G	G	00	00	A
基本型号 Basic Ordering Number	母体材质 Body Materials	输入压力 Inlet pressure	输出压力 Outlet pressure	压力表 Gauge	进 气 形 式 Inlet Connection	出气形式 Outlet Cnnnection	选项 Options
TKF-5-4	T:SUS316L	D:500psi	L:0-250psi	G:附压力表 Gauge (Mpa)	A:1/4"卡套Tube Fitting	A:1/4"卡套Tube Fitting	A:底进底出 Bottom in bottom out
		H:300ps	L:0-100psi	P:附压力表 Gauge (psi)	B:3/8"卡套Tube Fitting	B:3/8"卡套Tube Fitting	B:底进侧出 Bottom inlet and side outlet
		I:200psi	K:0-50psi		C:1/2"卡套Tube Fitting	C:1/2"卡套Tube Fitting	
		X:150psi	M:0-25psi				
		F:50psi			其他连接方式可选择 Other options	其他连接方式可选择 Other options	

气体控制终端系列 TKF-5-5

Terminal gas control series TKF-5-5

仪器台终端
Instrument bench terminal



气体控制终端系列 TKF-5-5
Terminal gas control series TKF-5-5

结构特点 Features

◆减压阀+隔膜间组合式结构 Regulator + Diaphragm Valve Assembled Constructure
◆母体螺纹 End Connection：1/4"NPT(F)
◆采用仪器台安装Instrument table installation

材料结构 Materials Of Construction

◆母体Body:SS316L
◆上盖Bonnet:SS316L
◆阀座：Valve seatPCTFE,PEEK
◆O型圈O-ring:Viton
◆膜片Diaphragm:哈氏合金Hastelloy

技术参数 Specifications

◆进口压力力Inlct Pressure max:500psig
◆出口压力 Outlct Pressurc:0-25psig.0-50psig.0-150psig_ 0-250psig
◆安全测证压力Proof Pressure1.5倍的最大翰入压力 1.5Times Max.Inlet Pressure
◆适用温度Opcrating termpcrature:-40'°C+100°C
◆泄漏率Regulator Leak rate: $2*10^{-8}$ atm cc/sec He
◆CV:0.15

安装尺寸图 Dimensions

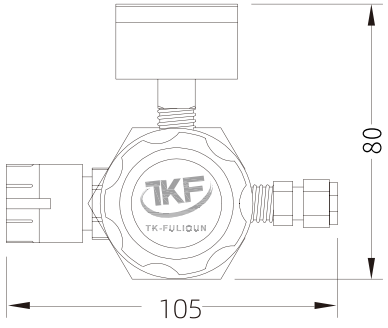

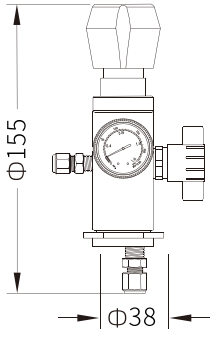

订购指南 Order Information

选型序列举例 Typical Ordering Number EX:TKF-5-5	T	D	G	G	00	00	A
基本型号 Basic Ordering Number	母体材质 Body Materials	输入压力 Inlet pressure	输出压力 Outlet pressure	压力表 Gauge	进 气 形 式 Inlet Connection	出气形式 Outlet Cnnnection	选项 Options
TKF-5-5	T:SUS316L	D:500psi	L:0-250psi	G:附压力表 Gauge (Mpa)	A:1/4"卡套Tube Fitting	A:1/4"卡套Tube Fitting	A:底进底出 Bottom in bottom out
		H:300ps	L:0-100psi	P:附压力表 Gauge (psi)	B:3/8"卡套Tube Fitting	B:3/8"卡套Tube Fitting	B:底进侧出 Bottom inlet and side outlet
		I:200psi	K:0-50psi		C:1/2"卡套Tube Fitting	C:1/2"卡套Tube Fitting	
		X:150psi	M:0-25psi				
		F:50psi			其他连接方式可选择 Other options	其他连接方式可选择 Other options	

气体控制终端系列 TKF-5-6

Terminal gas control series TKF-5-6

通风柜终端
Fume hood terminal



气体控制终端系列 TKF-5-6
Terminal gas control series TKF-5-6

结构特点 Features

◆采用特气单级式减压器，减压阀+隔膜阀组合式结构
Single-state Regulator Construction,Regulator + Diaphragm Valve Assem bled Constructure
◆经耐压测试及氨气泄漏检测 Pressure resistance test and helium leak detection
◆28mm不锈钢压力表，判读清晰 28mm Stainless steel pressure gauge,Easy to read data
◆采用通风柜安装 Install with a fume hood
◆出气口连接(可选择)Outlet connection (Optional)

材料结构 Materials Of Construction

◆减压器母体：Regulator Body SS316L
◆减压器垫片Regulator Gasket：PTFE,PCTFE,PEEK
◆球阀母体： Ball Valve Body:SS316L
◆接管路：Gas Line: 1/4"SS316LTUBE
◆膜片Diaphragm:哈氏合金Hastelloy

安装尺寸图
Dimensions

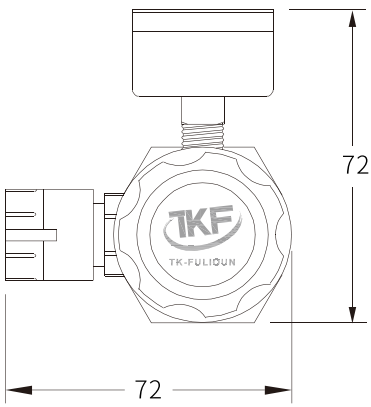

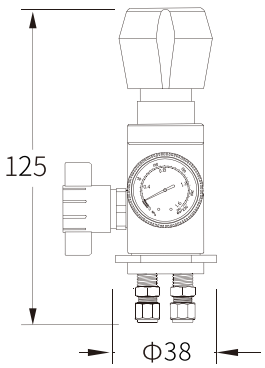

订购指南 Order Information

选型序列举例 Typical Ordering Number EX:TKF-5-6	T	D	G	G	00	00	A
基本型号 Basic Ordering Number	母体材质 Body Materials	输入压力 Inlet pressure	输出压力 Outlet pressure	压力表 Gauge	进气形式 Inlet Connection	出气形式 Outlet Cnnnection	选项 Options
TKF-5-6	T:SUS316L	D:500psi	L:0-100psi	G:附压力表 Gauge (Mpa)	A:1/4"卡套Tube Fitting	A:1/4"卡套Tube Fitting	A:底进底出 Bottom in bottom out
		H:300ps	K:0-50psi	P:附压力表 Gauge (psi)	B:3/8"卡套Tube Fitting	B:3/8"卡套Tube Fitting	B:底进侧出 Bottom inlet and side outlet
		I:200psi	M:0-25psi		C:1/2"卡套Tube Fitting	C:1/2"卡套Tube Fitting	
		X:150psi					
		F:50psi			其他连接方式可选择 Other options	其他连接方式可选择 Other options	

气体控制终端系列 TKF-5-8

Terminal gas control panel series TKF-5-8

墙面式 (隔膜阀轴向终端)
Wall-mounted (axial terminal of diaphragm valve)



气体控制终端系列 TKF-5-8
Terminal gas control panel series
TKF-5-8

结构特点 Features

◆组装式隔膜阀+减压阀结构Regulator + Diaphragm Valve AssembledConstructure
◆母体螺纹End Connection：1/4”NPT(F)
◆可采用面板或墙式安装Wall Mounting Or Panel Mounting

材料结构 Materials Of Construction

◆调压阀本体 Regulator Body:SS316L
◆上盖 Bonnet:SS316L
◆垫片 Gasket:PCTFE,PEEK
◆O型圈O-ring:Viton
◆膜片Diaphragm:哈氏合金Hastelloy

技术参数 Specifications

◆最大输入压力Inlet Pressure max:500psig
◆输出压力Outlet Pressure:0-25psig,0-50psig,0-150psig, 0-250psig
◆安全测试压力Proof Pressure:1.5倍的最大输入压力 1.5Times Max.Inlet Pressure
◆适用温度Operating Temperature:-40°C~+100°C
◆泄漏率Leak rate:2*10^{-8}atm c/secHe
◆CV:0.19

安装尺寸图
Dimensions

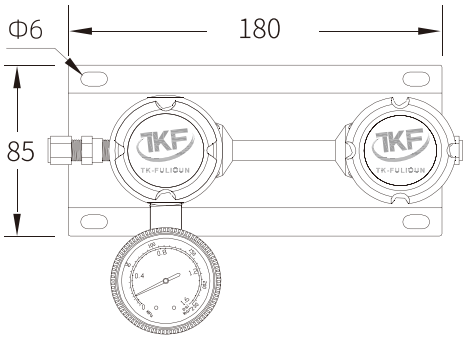

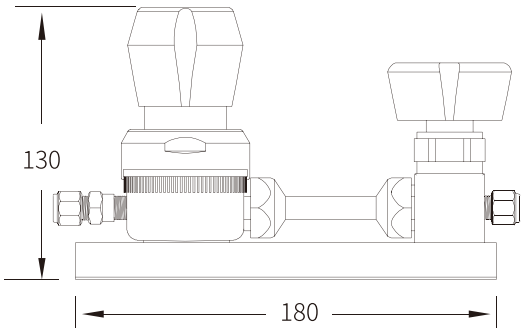

订购指南 Order Information

选型序列举例 Typical Ordering Number EX:TKF-5-8	T	D	G	G	00	00	A
基本型号 Basic Ordering Number	母体材质 Body Materials	输入压力 Inlet pressure	输出压力 Outlet pressure	压力表 Gauge	进气形式 Inlet Connection	出气形式 Outlet Cnnnection	选项 Options
TKF-5-8	T:SUS316L	D:500psi	L:0-250psi	G:附压力表 Gauge (Mpa)	A:1/4"卡套Tube Fitting	A:1/4"卡套Tube Fitting	A:一进一出 One in one out
		H:300ps	L:0-100psi	P:附压力表 Gauge (psi)	B:3/8"卡套Tube Fitting	B:3/8"卡套Tube Fitting	B:一进二出 One in two out
		I:200psi	K:0-50psi		C:1/2"卡套Tube Fitting	C:1/2"卡套Tube Fitting	C:一进三出 One in Three out
		X:150psi	M:0-25psi		D:3/4"卡套Tube Fitting	D:3/4"卡套Tube Fitting	
		F:50psi			E:1"卡套Tube Fitting	E:1"卡套Tube Fitting	
					其他连接方式可选择 Other options	其他连接方式可选择 Other options	

气体控制终端系列 TKF-5-9

Terminal gas control panel series TKF-5-9

墙面式(隔膜阀径向终端)
Wall-mounted (radial terminal of diaphragm valve)



气体控制终端系列 TKF-5-9
Terminal gas control panel series TKF-5-9

结构特点 Features

◆采用单级式减压器,隔膜阀组合式结构
Single-state Regulator Construction,Regulator + Diaphragm Valve Assembled Constructure
◆经耐压测试及氦气泄漏检测 Pressure resistance test and helium leak detection
◆1”不锈钢压力表,判读清晰1”Stainless steel pressure gauge,Easy to read data
◆可采用面板或墙式安装Wall Mounting Or panel Mounting

材料结构 Materials Of Construction

◆减压器母体Regulator Body:SS316L
◆减压器垫片Regulator Gasket:PTFE,PCTFE,PEEK
◆球阀母体Ball Valve Body :SS316L
◆接管路Gas line:1/4"SS316LTUBE
◆膜片Diaphragm:哈氏合金Hastelloy

安装尺寸图
Dimensions

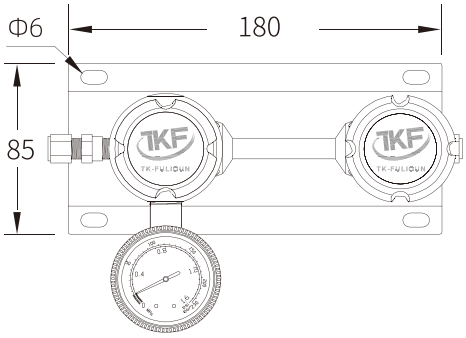

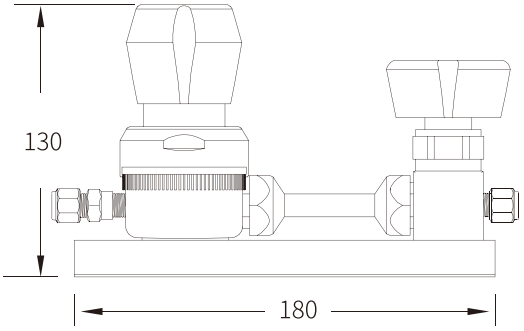

订购指南 Order Information

选型序列举例 Typical Ordering Number EX:TKF-5-9	T	D	G	G	00	00	A
基本型号 Basic Ordering Number	母体材质 Body Materials	输入压力 Inlet pressure	输出压力 Outlet pressure	压力表 Gauge	进气形式 Inlet Connection	出气形式 Outlet Cnnnection	选项 Options
TKF-5-9	T:SUS316L	D:500psi	L:0-250psi	G:附压力表 Gauge(Mpa)	00:1/4"NPT(F)	00:1/4"NPT(F)	A:一进一出 One in one out
		H:300ps	L:0-100psi	P:附压力表 Gauge(psi)	01:1/4"NPT(M)	01:1/4"NPT(M)	B:一进二出 One in two out
		I:200psi	K:0-50psi		2:1/4"卡套连接 Tube Fitting	2:1/4"卡套连接 Tube Fitting	C:一进三出 One in three out
		X:150psi	M:0-25psi		4:3/8"卡套连接 Tube Fitting	4:3/8"卡套连接 Tube Fitting	
		F:50psi			6:1/2"卡套连接 Tube Fitting	6:1/2"卡套连接 Tube Fitting	
					8:6mm"卡套连接 Tube Fitting	8:6mm"卡套连接 Tube Fitting	
					10:8mm"卡套连接 Tube Fitting	10:8mm"卡套连接 Tube Fitting	
					其它形式接头可供选择 Other options.	其它形式接头可供选择 Other options.	

汇流排系列

Bus-bar series

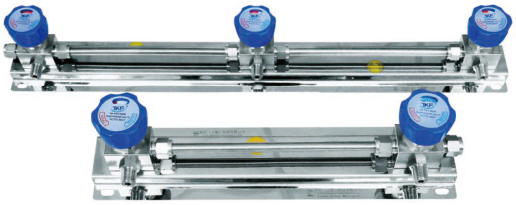

结构特点 Features

◆用于汇流排，安装方便，扩展灵活 Easy to Installation, Extended flexibility

◆依使用位置分为左侧，右侧式Install on the left Or right side accordingto your requirements

◆管路经耐压和氦气泄漏测试 Pressure resistance test and helium leak detection

◆最大进气压力Max Inlet Pressure：3000Psig

◆采用墙式安装Wall Mount

汇流排系列
Bus-bar series

材料结构 Materials Of Construction

◆管路Gas line：OD1/2”,SS316LBA

◆膜片阀Diaphragm Valve Body：SS316L

◆膜片Diaphragm:哈氏合金 Hastelloy

安装尺寸图
Dimensions

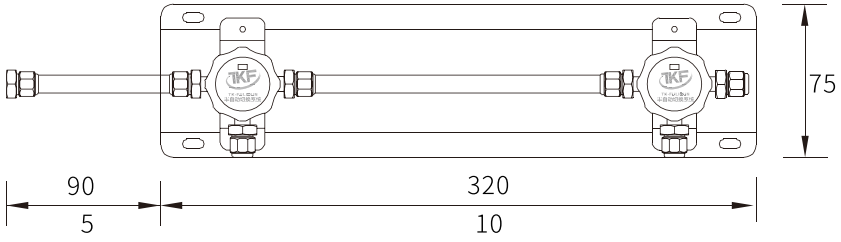

订购指南 Order Information						
选型序列举例 Typical Ordering Number EX:TKF-10	安装配置结构	节点数	间距	进气形式	出气形式	出气管长度
基本型号 Basic Ordering Number	Configuration model	Number of nodes	Spacing distance	Inlet connection	Outlet connection	Outlet Gas Line Length
TKF-10	R右侧式Right side	2;3;5	5：85mm	FNT4:1/4"NPT(F(标配Standard)	TF8:3/8"卡套接头Tube Fitting	无：85mm(标配Stangard)
	L左侧式Left side		10：320mm(标配Standard)	NT4:1/4"NPT(M)	TF8:1/2"卡套接头Tube Fitting	10：320 mm

金属导管 | 钢瓶接头

Flexible Metal Hose | Cylinder Connections



结构特点 Features

- ◆高柔性全金属软管 High flexible all metal hose
- ◆316L不锈钢环形波纹内管316LStainless Steel Core Bellows
- ◆各种接口形式和公制、英制，尺寸Variety of end connection,fractional and metic sizes
- ◆最大工作压力可达：3000Psig Working Pressure up tp 3000Psig(200Bar)
- ◆具有经济性、轻便和灵活性 Economical Portability and Flexible
- ◆每一根软管都经过氦检 Each assembly leak tested

订购指南 Order Information

选型序列举例 Typical Ordering Number EX:TKF-15	长度	进气接口	出气接口	选项	进气接口	出气接口
基本型号 Basic Odering Number	Length	Inlet Connection	Outlet Connection	Options	Inlet Connection	Outlet Connection
TKF-15	500:0.5M	00:1/4"NPT(F)	00:1/4"NPT(F)	CV:单向阀 Check Valve	23:CGA330	OD4:1/4"Tubing
(内衬Teflon)	1000:1M	24:CGA350	01:1/4"NPT(M)		24:CGA350	TF4:1/4"卡套接头Tube Fitting
	2000:2M	27:CGA580			27:CGA580	
		28:CGA660			28:CGA660	
		52:G5/8-RH(E)			52:G5/8-RH(E	
	其他尺寸可供选择 Other options	其他形式接头可供选择 Other options			其他形式接头可供选择 Other options	

钢瓶接头
Cylinder Connections



订购指南 Order Information

接头规格 End Connection	螺母 Nut		进气管 Body		垫片 Gssket	
	型号 Ordering Number	材质 Material	型号 Ordering Number	材质 Material	型号 Ordering Number	材质 Material
G5/8-RH	SS-NT-G5/8	SS316	SS-NP-G5/8	SS316	……	……
G1/2-RH	SS-NT-G1/2	SS316	SS-NP-G1/2	SS316	……	……
W21.8-LH	SS-NT-W21.8L	SS316	SS-NP-W21.8L	SS316	……	……
W21.8-RH	SS-NT-W21.8	SS316	SS-NP-W21.8	SS316	……	……
W22-LH	SS-NT-W22L	SS316	SS-NP-W22L	SS316	W-TF-W22L	PTFE
W22-RH	SS-NT-W22	SS316	SS-NP-W22	SS316	W-TF-W22	PTFE
SS-CGA*	SS-NT--CGA*	SS316	SS-NP-CGA*	SS316	W-TF-CGA*	PTFE

压力表

Pressure Gauges

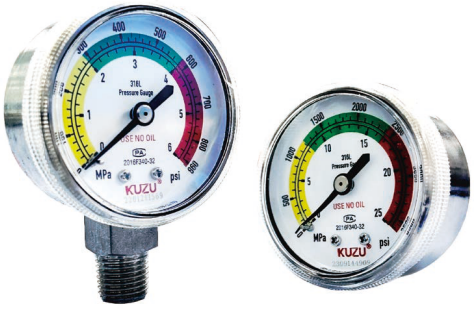

结构特点 Features

◆备有尺寸为63 mm((21/2) in.)的表盘。It is available with a 63 mm (21/2) in.) dial.

◆使用卡口环，便于接触可选的调节指针。Use the bayonet ring for easy access to the optional adjustment pointer.

◆透镜由安全玻璃制成，提供额外保护。The lens is made of safety glass for additional protection.

◆可充液设计。Rechargeable design.

安装尺寸图 Dimensions

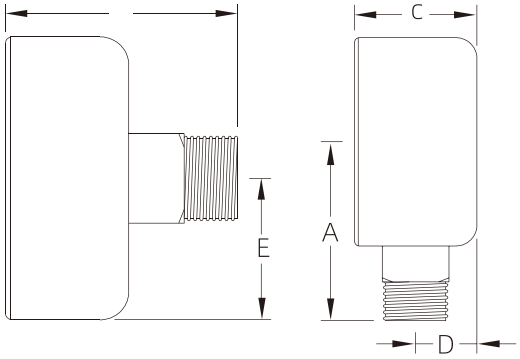

材料结构 Materials Of Construction

元件 Componet	材料Material
端接 End Connection	316 SS
卡套管 Tubing	
外壳 casing	304 SS
充液 liquid-filled	甘油，低温甘油或硅酮 Glycerin, cryogenic glycerin or silicone
活动部分 Movable part	不锈钢Stainless Steel
透镜 lens	层压安全玻璃glass
透镜衬垫 Lens pad	丁腈橡胶Nitrile butadiene rubber
度盘 dial	铝aluminum
指针 pointer	

订购指南 Order Information

选型序列举例 Typical Ordering Number EX:TKF-14	表盘尺寸 mm (in.)	充灌液体	端接	尺寸 Size in. (mm)			
基本型号 Basic Ordering Number	Dial size	Pouring liquid	End Connection	A	B	C	D
TKF-14-1轴向压力表 (Axial pressure gauge)	63(21/2)	X=未充液 (No liquid filled) 1=甘油 (Glycerol) 2=低温甘油 (Cryogenic glycero) 3=硅酮 (Silicone)	1/4 NPT(M)	2.26 (57.3)	—	1.30(33.0)	0.39(10.0)
TKF-14-2径向压力表 (Radial pressure gauge)	63(21/2)	X=未充液 (No liquid filled) 1=甘油 (Glycerol) 2=低温甘油 (Cryogenic glycero) 3=硅酮 (Silicone)	1/4 NPT(M)	—	2.39 (60.8)	1.30(33.0)	—

全自动切换系统

Automatic Switching System



结构特点 Features

◆便于管理可循环使用，占地面积小，便于安放 Easy to manage and reusable, it takes up little space and is easy to place.

◆经耐压测试及氦气泄漏检测 Pressure resistance test and helium leak detection

◆采用固定式安装 The installation is fixed.

◆提高工作效率和安全生产 Improve work efficiency and safe production

材料结构 Materials Of Construction

◆减压器母体 Regulator Body :SS316L

◆减压器垫片 Regulator Gasket:PTFE,PCTFE,PEEK

◆膜片Diaphragm:哈氏合金 Hastelloy

技术参数 Specifications

◆最大输入压力 Inlet Pressure max:4300psig

◆输出压力 Outlet Pressure:0-25psig,0-50psig,0-100psig, 0-250psig

◆适用温度 Operating temperature:-40°°C~+100°C

◆减压器泄漏率 Regulator Leak rate:$2^{*}10^{-8}$atm cc/sec He

安装尺寸图 Dimensions

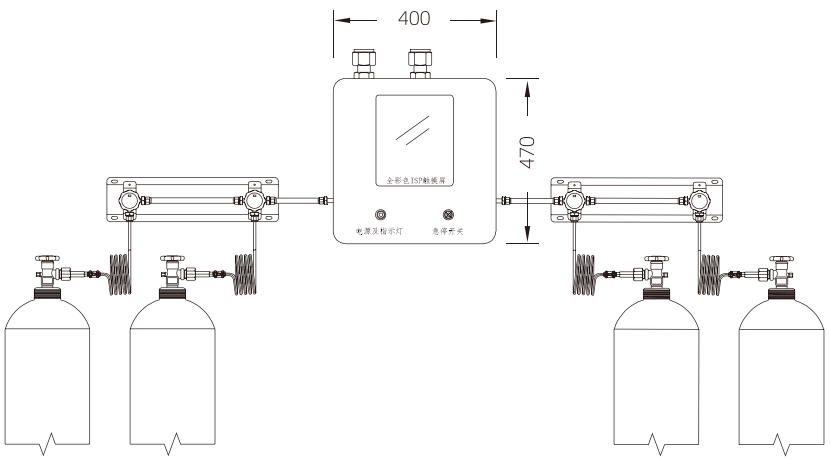

订购指南 Order Information

选型序列举例 Typical Ordering Number EX:TKF-5-7	T	D	G	G	00	00	A
基本型号 Basic Ordering Number	母体材质 Body Materials	输入压力 Inlet Pressure	输出压力 Outlet Pressure	压力表 Gauge	进气形式 Inlet Connection	出气形式 Outlet Cnnnection	选项 Options
TKF-16-1	T:SUS316L	D:4300ps	G:0-250psi	G:附压力表 Gauge (Mpa)	00:1/4"NPT(F)	00:1/4"NPT(F)	A:远程报警Remote alarm
		X:2000psi	L:0-100psi	P:附压力表 Gauge (psi)	01:1/4"NPT(M)	01:1/4"NPT(M)	B:高压软管 High pressure hose
		F:500psi	K:0-50psi		2:1/4"卡套连接Tube Fitting	2:1/4"卡套连接Tube Fitting	C:高压硬管Remote alarm
			M:0-25psi		4:3/8"卡套连接Tube Fitting	4:3/8"卡套连接Tube Fitting	D:阻火器 Flashback Arrestor
					6:1/2"卡套连接Tube Fitting	6:1/2"卡套连接Tube Fitting	E:安全阀 Relief Valve
					8:6mm"卡套连接Tube Fitting	8:6mm"卡套连接Tube Fitting	
					10:8mm"卡套连接Tube Fitting	10:8mm"卡套连接Tube Fitting	
					其它形式接头可供选择 Other options.	其它形式接头可供选择 Other options.	

全自动气柜/气架

Automatic Gas Control Cabinet/Rack



全自动气柜

Automatic Gas Control Cabinet



设计特点 Design Feature

◆自动吹扫，自动切换，自动安全切断Automatic purge, switch, Safety shutdown
◆压力传感器Pressure sensor
◆PLC 控 制 PLC control
◆消防喷淋的接入Equipped with fire sprinkler
◆侦测器Detector
◆紧急EMO 按钮Equipped with EMO emergency buttonEquipped
◆防爆气瓶柜 Explosion-proof gas cylinder cabinet
◆砰称Weigher
◆加热气化装置 Heating gasification device

应用场地 Application

◆TKF-13 使用空间比较小的实验室，针对特殊气体的有毒、有害、易燃、易爆等特性，全自动气柜采用2.4mm 冷拔钢板覆以聚酯粉的抗腐蚀制成的箱体来存放特殊气体钢瓶，箱体设计有大、小门，大门用来更换钢瓶平时钢瓶进出用，小门配有透明防爆玻璃用来观察设备的运行和调节设备内调压阀用。大小门都设有密封条来保证箱体的密封性。可以永久性的安装房间或随便更换地方。
◆使用，通过这款阀门使管路里的气体减压到输送使用设备点，使设备使用压力更加稳定可靠。
◆TKF-13:The laboratory with less space is used for the toxic, harmful, flammable, explosive and other special gases。The gas rack is made of 2.5mm square steel coated with polyester powder corrosion resistant box to store special gases. The cabinet is designed to facilitate routine cylinder replacement、and equipped with transparent explosion-proof glass for observing the operation of the equipment and timely pressure regulation. The cabinet door with sealing strips to ensure the tightness of the box. Can be permanently installed in the room or casually replaced
◆ Through this device, the gas of the gas line is reduced to the point of transmission and use, so that the use pressure of the equipment is more stability and reliability

全自动气柜

Automatic Gas Control Cabinet

安装尺寸图
Dimensions

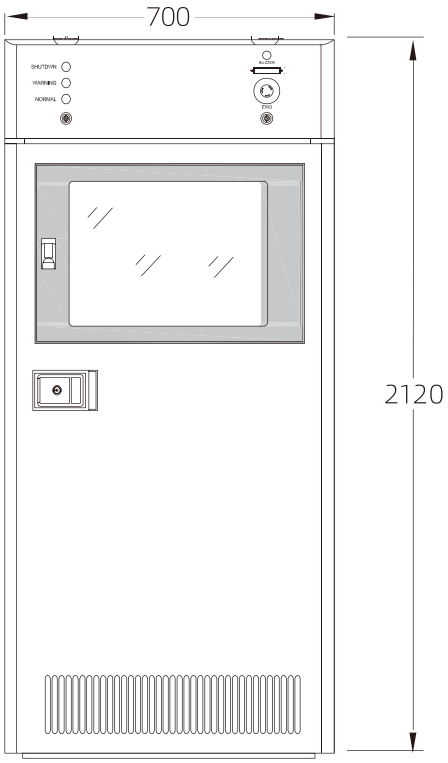

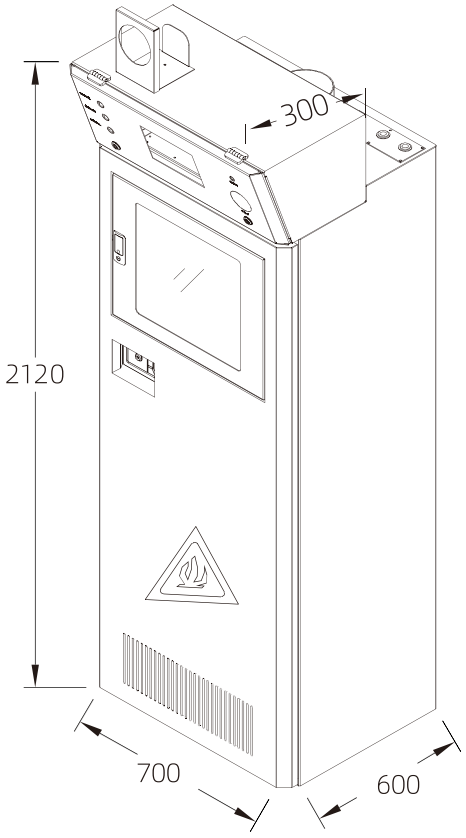

订购指南 Order Information									
选型序列举例 Typical Ordering Number EX:TKF-13	柜体材质	输入压力	输出压力	安全装置	其它	选择	尺寸 Size (mm)		
基本型号 Basic Ordering Number	Boby Materials	Inlet Pressure	Outlet Pressure	safety device	Other	Options	长 L	宽 W	高 H
全自动气柜 Auto Gas cylinder cabinet TKF-13	钢Steel	6000psi	0-250psi	火焰探头Flame sensor	加热Heating gasification device	一进一出One in one out	700*600*2120		
		3000psi	0-100psi	气体泄漏报警器Leak alarm	秤称Weigher	一进二出One in two out			
		1500psi	0-50psi	消防喷淋Fire sprinkler					
			0-25psi	烟感探头Smoke detector					
			0-15psi	切断阀Emergency shut off valve					
				压力传感器Pressure sensor					
		其它压力可选配Other options		其它功能可选配Other options			多种尺寸规格供选择Other options		

全自动气架

Automatic Control Gas Rack



设计特点 Product design features

◆自动吹扫，自动切换，自动安全切断 Automatic purge, switch, Safety shutdown

◆压力传感器 Pressure sensor

◆PLC 控制 PLC control

◆消防喷淋的接入 Equipped with fire sprinkler

◆侦测器 Detector

◆紧急EMO 按钮 Equipped with EMO emergency buttonEquipped with EMO emergency button

应用场地 Application

◆TKF-11 使用空间比较少的实验室，针对特殊气体的有毒、有害、易燃、易爆等特性，全自动气柜采用2.5mm 方钢覆以聚酯粉的抗腐蚀制成的箱体来存放特殊气体

钢瓶，架子设计有钢瓶固定支架，用来更换钢瓶时钢并瓶固定使用，上方的 PLC控 制箱用于设备的运行和调节设备内调压阀用。

◆控制箱门都设有密封条来保证箱体的密封性。可以永久性的安装房间或随便更换地方使用，通过这款阀门使管路里的气体减压到输送使用设备点，使设备使用压力更加稳定可靠。

◆The laboratory with less space is used for the toxic, harmful, flammable, explosive and other special gases。The gas rack is made of 2.5mm square steel coated with polyester powder corrosion resistant box to store special gases. Specially designed cylinder fixing bracket, which is used to replace the steel cylinder and fix the cylinder.The top of the equipment is equipped with a PLC control box for the operation of the equipment and pressure regulation.

◆The control box door with sealing strips to ensure the tightness of the box. Can be permanently installed in the room or casually replaced.Through this device, the gas of the gas line is reduced to the point of transmission and use, so that the use pressure of the equipment is more stability and reliability

全自动气架

Automatic Control Gas Rack

安装尺寸图
Dimensions

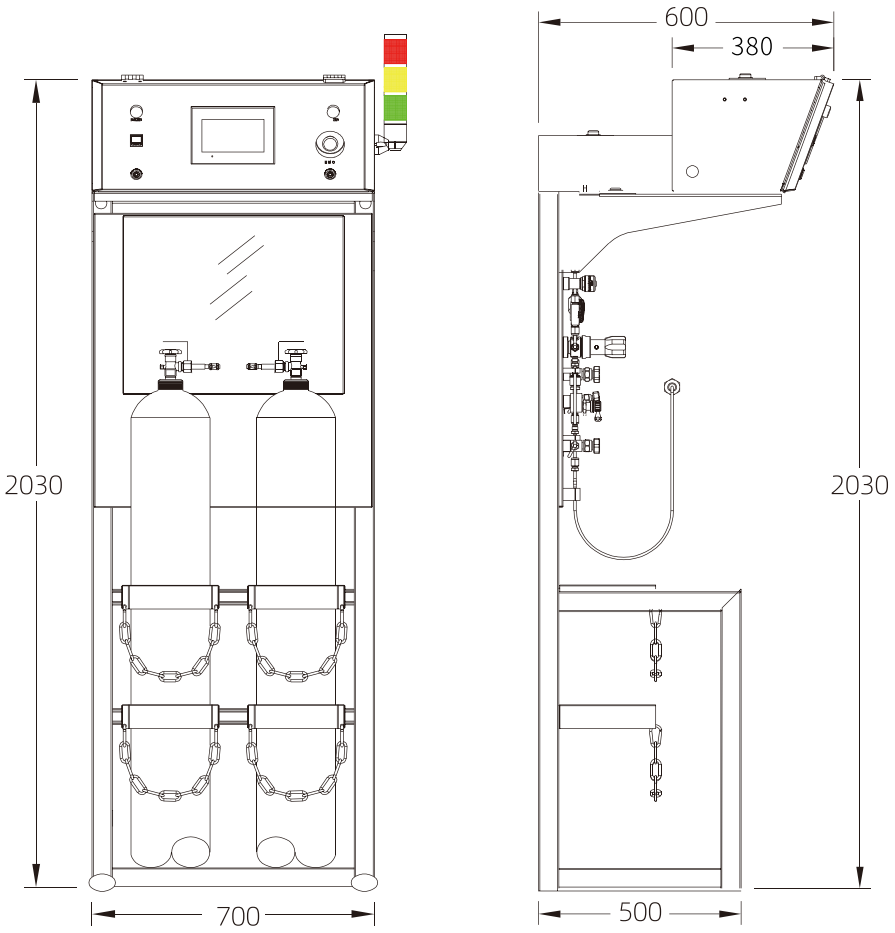

订购指南 Order Information									
选型序列举例 Typical Ordering Number EX:TKF-11	柜体材质	输入压力	输出压力	安全装置	其它	选择	尺寸 Size (mm)		
基本型号 Basic Ordering Number	Boby Materials	Inlet Pressure	Outlet Pressure	safety device	Other	Options	长 L	宽 W	高 H
全自动气架 Auto Gas Rack TKF-11	钢Steel	6000psi	0-250psi	火焰探头Flame sensor	加热Heating gasification device	一进一出One in one out	700x500x2030		
		3000psi	0-100psi	气体泄漏报警器 Leak alarm	砰称Weigher	一进二出One in two out			
		1500psi	0-50psi	消防喷淋Fire sprinkler					
			0-25psi	烟感探头Smoke detector					
			0-15psi	切断阀Emergency shut off valve					
				压力传感器Pressure sensor					
		其它压力可选配Other options		其它功能可选配Other options			多种尺寸规格供选择 Other options		

普通气瓶柜

Conventional gas cylinder cabinet



全钢气瓶柜 All-steel gas cylinder Control cabinet

◆锁具Door lock：单门，单锁,双门，双锁Single doorlock and Double door lock Available for selection

◆颜色Cabinet color：可订制 customizable

◆产品认证 Product certification：EN14470- CE认证

设计特点 Product design features

◆柜体Cabinet material ：采用≥1.2mm优质冷轧钢板，经酸洗磷化处理，表面环氧树脂静电喷涂，达到防酸碱及防锈之效果。Made of cold rolled steel plate ≥ 1.2mm,It was acid-washed and phosphating,The surface is electrostatic sprayed with epoxy resin,To prevent acid and alkali and rustt

◆门板Cabinetdoor：双层防爆结构，采用可脱卸式铰链，正面带透明视窗。Double layer explosion protection and Removable hinge construction,A viewable window is installed

◆PASS孔PASS Hole：柜体侧面设有PASS孔，保证柜内气体流动。The side of the cabinet is provided with a PASS hole to ensure the flow of gas in the cabinet

◆固定装置Gas cylinder fastening device：内部采用不锈钢链条式固定，防止气瓶倾倒，上下可调节，适用于不同高度的气瓶。Safe, reliable and easy to operate cylinder fastening device

◆底板Cabinet floor：底部装有加厚印花底板 Made of embossed steel plate。

◆踏板footboard：柜体底部设有加厚印花踏板，方便气瓶装卸。Cabinet floor is equipped with footboarda whicch is made of embossed steel plate,Convenient cylinder loading and unloading

◆排风系统Exhaust system：风机配合报警装置，一线连接，在报警后5秒内自动启动排风装置，稀释可燃气体浓度直至低于芯片切点设定值。Air blower is connected to the alarm device,Automatically start the exhaust device within 5 seconds after the alarm and dilute the combustible gas concentration until it is below the set value.

◆报警器Alarm apparatus：采用工业级的专用可燃气体探测器，空气扩散采样，当达到芯片切点设定的浓度时，将自动报警。报警系统可连续自动监测室内气体的泄露程度，在达到设置浓度范围探头传感器会感应到并且发出警报，有效避免因气体泄露制造的恶性事故。Equipped with industrial grade flammable gas detector for air diffusion sampling,When the concentration set by the sensor is reached, an automatic alarm will be generated,The alarm system can continuously and automatically monitor the degree of indoor gas leakage,When the set concentration range is reached, the probe sensor will sense and issue an alarm, effectively avoiding harmful accidents caused by gas leakage.

普通气瓶柜

Conventional gas cylinder cabinet

安装尺寸图

Dimensions

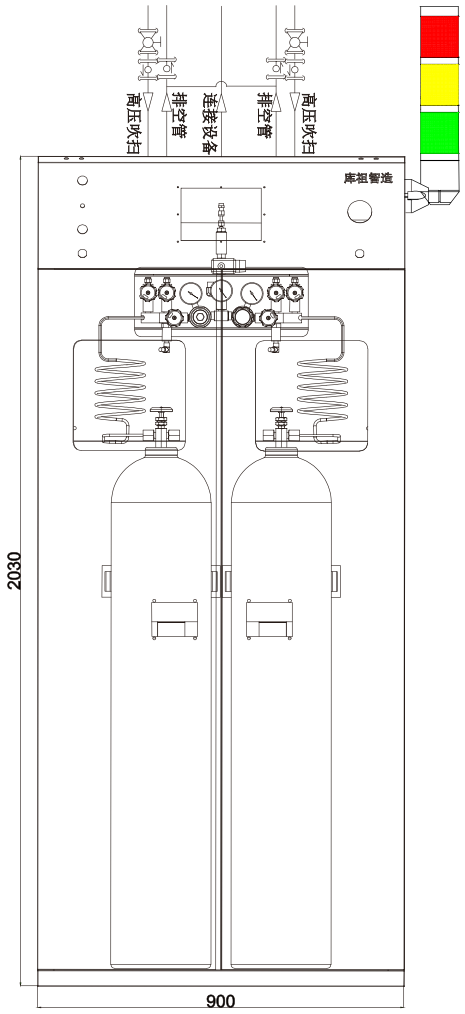

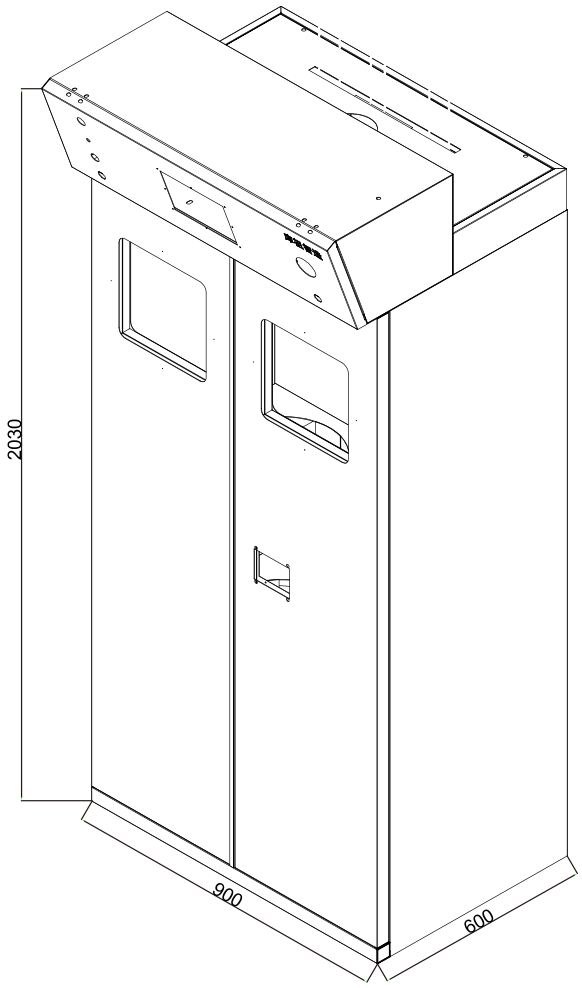

订购指南 Order Information							
选型序列举例 Typical Ordering Number EX:TKF-10	柜体材质	输入压力	输出压力	安全装置	尺寸 Size (mm)		
基本型号 Basic Ordering Number	Boby Materials	Inlet Pressure	Outlet Pressure	safety device	长 L	宽 W	高 H
普通气瓶柜Conventional gas cylinder cabinet TKF-12-1 (单钢瓶 single steel cylinder)	钢Steel	6000psi 3000psi 1500psi 500psi	2500psi 0-1500psi 0-500psi 0-160psig 0-250psig 0-25psi 0-15psi	烟感探头Smoke detector 泄漏报警器 Leak alarm 切断阀 Emergency shut off valve 压力传感器Pressure sensor	600	600	2030
普通气瓶柜Conventional gas cylinder cabinet TKF-12-2 (双钢瓶 Dual steel cylinder)					900	600	2030
普通气瓶柜Conventional gas cylinder cabinet TKF-12-3 (三钢瓶 Thee steel cylinders group)					1200	600	2030
普通气瓶柜Conventional gas cylinder cabinet TKF-12-4 (四钢瓶 Four steelcylinder group)					1400	600	2030
其它功能可选配Other options					多种尺寸规格供选择Other options		

防爆移动气体房

Explosion-proof Mobile Gas House



防爆移动气体房

Explosion-proof Mobile Gas House

前言 preface

◆当今工业面对越来越多的危险化学品，易燃气体，它的安全储存，如何减少火灾事故的发生，火灾可以在瞬间无情地吞噬生命，摧毁财产。保护人身与设备安全成为急需要解决的问题。Today's industry is facing more and more dangerous chemicals, flammable gases, its safe storage, how to reduce the occurrence of fire accidents,Fires can ruthlessly consume lives and destroy property in an instant. The protection of personal and equipment safety has become an urgent problem to be solved

◆集中供气安全舱用于规范储存、可燃气体及某些危险化学品包括腐蚀性化学品，也用来储存易燃、可燃的油品和油类等。The Explosion-proof Mobile Gas Houseis used to regulate storage, combustible gases and certain hazardous chemicals including corrosive chemicals,It is also used to store flammable and combustible oils, oils, etc.

◆化工生产企业、实验室、科研机构等各种场所会使用不同类型的气体以及化学品，因此需要不同定制的危化品安全储存舱来储存气体危化 Chemical plants, laboratories, research institutions and other sites use different types of gases and chemicals,Therefore, different customized hazardous chemical safety storage house are required to store gas hazards.

安全舱优势 Product Advantage

◆集成度高，机动性强，高强度钢结构舱体设计；功能高度集成，满足用户多种危险品存储需求。High integration, high mobility, high strength steel structure design; Highly integrated functions to meet users' various dangerous goods storage requirements

◆便于管理可循环使用，占地面积小，便于安放，可独立成区，方便管理，主体项目搬迁或者改造，无需重新报建危化品仓库。Easy to manage、recyclable and Flexible placement.It can be independent into areas, easy to manage. The main project does not need to re-apply for the construction of hazardous chemical warehouse

◆安全级别更高，严格依据国家建筑标准设计，达到A 型抗爆；智能中央控制系统，实时监控安全舱运行状态，可以远程手机控制，可为实验人员提供安全保障，对于实验人员的生命具有重大的意义。Strictly according to the national building standards design, higher safety level can reach A type anti-explosion. The intelligent central control system can monitor the operation status of the safety cabin in real time. Remote cell phone control provides security for experimentalists.

设计相关的规范、规定

Relevant national standards and norms

◆《特种气体系统工程技术规范》GB50646-2012 Technical Code for Engineering of Special Gas System GB50646-2012

◆《大宗气体纯化及输送系统工程技术规范》GB50724-2011 Technical Code for Engineering of Bulk Gas Purification and Delivery System GB50724-2011

◆《工业管道的基本识别色、识别符号和安全标识》Basic Identification Colors, Identification Symbols and Safety Signs for Industrial Piping GB7231-2003《建筑设计防火规范》GB50016-2006 GB7231-2003 Code for Design of Building Fire Protection; GB50016-2006

◆《工业金属管道设计规范》GB50316-2000 Code for Design of Industrial Metal Piping GB50316-2000

◆《氢气站设计规范》GB50177-2005 Code for Design of Hydrogen Station GB50177-2005

◆《爆炸和火灾危险环境电力装置设计规范》GB50058-92 Code for Design of Electrical Installations in Explosive and Fire Hazardous Atmospheres GB50058-92

◆《电子工业职业安全卫生设计规范》SJ30002-92 Design Code for Occupational Safety and Health in Electronic Industry SJ30002-92

◆《环境空气质量标准》GB3095-1996 Ambient Air Quality Standards GB3095-1996

◆《大气污染物综合排放标准》GB16297-1996 Integrated Emission Standard for Air Pollutants GB16297-1996

◆《钢制压力容器》GB150-98 Steel Pressure Vessels GB150-98

◆《危险化学品安全技术说明书编写规定》GB16483-2000 Safety Data Sheet for Hazardous Chemicals GB16483-2000

◆《建筑物防雷接地设计规范》GB500057-2010 Code for Design of Lightning Protection and Earthing of Buildings GB500057-2010

◆《石油化工可燃气体和有毒气体检测报警设计规范》Design Code for Flammable and Toxic Gas Detection and Alarm in Petrochemical Industry GB50493-2019《钢结构焊接》根据国家建筑设计图集 GB50493-2019 Code for Welding of Steel Structures in accordance with the National Building Design Code

◆14J938 抗暴规范达到 A 型抗暴 14J938 anti-explosion standard reaches type A anti-explosion

防爆移动气体房

Explosion-proof Mobile Gas House





CNEX 国家防爆

集中供气移动气体房功能 Featue

- 人脸识别控制功能、低压报警系统、紧急排风系统Configure the face recognition control function,Low pressure alarm system, Emergency exhaust system
- 双重消防保护系统、火焰侦测系统、烟感系统Dual fire protection system, flame detection system, smoke sensing system
- 温湿度控制系统、视频监控系统、手机报警系统Configure the temperature and humidity control、system、Video surveillance and Mobile phone monitoring system
- 远程控制系统、人员出入自动记录系统Remote control、Automatic personnel entry and exit recording
- 事故追踪记录系统、多机联动系统、泄漏系统Accident tracking and recording、Multi-machine linkage and Leak alarm system
- 事故紧急切断系统、双重电源供应系统、急冲淋系统Emergency cut-off、Dual power supply and Emergency spraysystem
- 排水系统、新风系统、双冷暖空调系统等 Drainage、Automatic air change and Dual air conditioning system

防爆移动气体房

Explosion-proof Mobile Gas House

集中供气系列
Centralized supply gas series



移动式防爆气柜优势 Advantages of mobile explosion-proof gas house

◆ 目前随着科学技术的发展，各种实验室仪器的增加，需要用到各种气体，其中包含易燃易爆、有毒、腐蚀性等气体，常规实验室在该气体都是存放在室内或仪器旁边(仪器房间)存在较大的安全隐患，我公司针对该气体存储情况和安全使用功能，设计研发出了一款新型的移动式防爆供气柜，该柜体具有防爆抗爆功能(经过国家爆炸重点实验室爆炸试验)，内置气体泄漏报警装置及联动装置，当气体泄漏时立即报警并关闭阀门，将气体排出室外，并且配置了防爆空调、温湿度监控调节、防雷，消防喷淋等功能。在安装时仅需一块水泥基座，该柜体还具有静电消除等功能，使用该柜体可将原来放置在室内的易燃易爆、有毒、腐蚀等危险气体彻底搬移的室外，同时彻底解决了室内的安全隐患。

◆ With the development of science and technology, the increase of various laboratory instruments requires the use of various gases、including flammable, explosive, toxic, corrosive and other gases.The current situation is that these gases are stored indoors or next to the instrument, which has a greater safety risk. Our company has designed and developed a new type of mobile explosion-proof House for the gas storage and safe use function.The whole cabinet has explosion-proof and antiknock function(Consistent with the state key laboratory explosion test),Equipped with gas leakage alarm device and linkage device.When the gas leaks, immediately alarm and close the valve to expel the indoor gas to the outdoor、And equipped with explosion-proof air conditioning, temperature and humidity monitoring and regulation, lightning protection, fire sprinkler and other functions.Only one cement base is required for installation.The Explosion-proof Mobile Gas House can completely move the inflammable, explosive, toxic, corrosive and other dangerous gases originally placed indoors to the outside, and completely solve the indoor safety risks.

防爆移动气体房

Explosion-proof Mobile Gas House

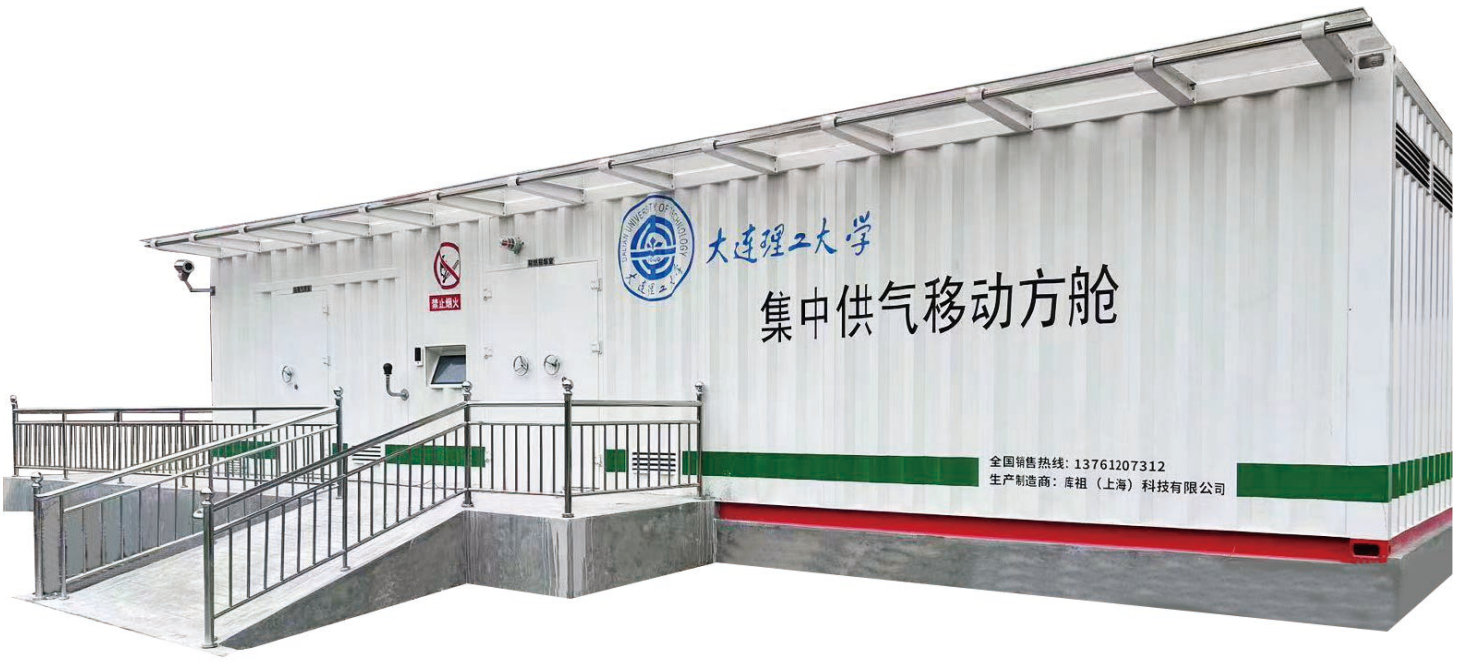







订购指南 Order Information

选型序列举例	舱位	单钢瓶	双钢瓶	安全装置	其他	尺寸 Size (mm)		
基本型号 Basic Odering Number	Cabin space	Single gas cylinder	Double gas cylinders	safety device	Other	长 L	宽 W	高 H
SS-15	单舱 Single cabin	10组10瓶	6组12瓶	人脸识别控制功能、低压报警系统、紧急排风系统 Configure the face recognition control function,Low pressure alarm system, Emergency exhaust system	加热 Heater 保温 Thermal insulation	3500	2600	2800
		15组15瓶	9组18瓶			4500	2600	2800
		22组22瓶	14组28瓶	人双重消防保护系统、火焰侦测系统、烟感系统 Dual fire protection system, flame detection system, smoke sensing system		6000	2600	2800
		37组37瓶	24组48瓶	温湿度控制系统、视频监控系统、手机报警系统 Configure the temperature and humidity control、system、 Video surveillance and Mobile phone monitoring system		9000	2600	2800
		51组51瓶	32组64瓶			12000	2600	2800
	双舱 Double cabins	14组14瓶	12组24瓶	远程控制系统、人员出入自动记录系统 Remote control、Automatic personnel entry and exit recording		4500	2600	2800
		18组18瓶	15组30瓶			6000	2600	2800
		31组31瓶	24组48瓶	故追踪记录系统、多机联动系统、泄漏系统 Accident tracking and recording、 Multi-machine linkage and Leak alarm system		9000	2600	2800
		45组45瓶	33组66瓶	事故紧急切断系统、双重电源供应系统、急冲淋系统 Emergency cut-off、Dual power supply and Emergency spray system		12000	2600	2800
	三舱 Three cabins	34组34瓶	22组44瓶			6000	2600	2800
		44组44瓶	26组52瓶	排水系统、新风系统、双冷暖空调系统等 Drainage、Automatic air change and Dual air conditioning system		9000	2600	2800
		58组58瓶	35组70瓶			12000	2600	2800
其它功能可选配Other options						尺寸规格可选配Other options		

防爆移动气体房

Explosion-proof Mobile Gas House

安装尺寸图
Dimensions

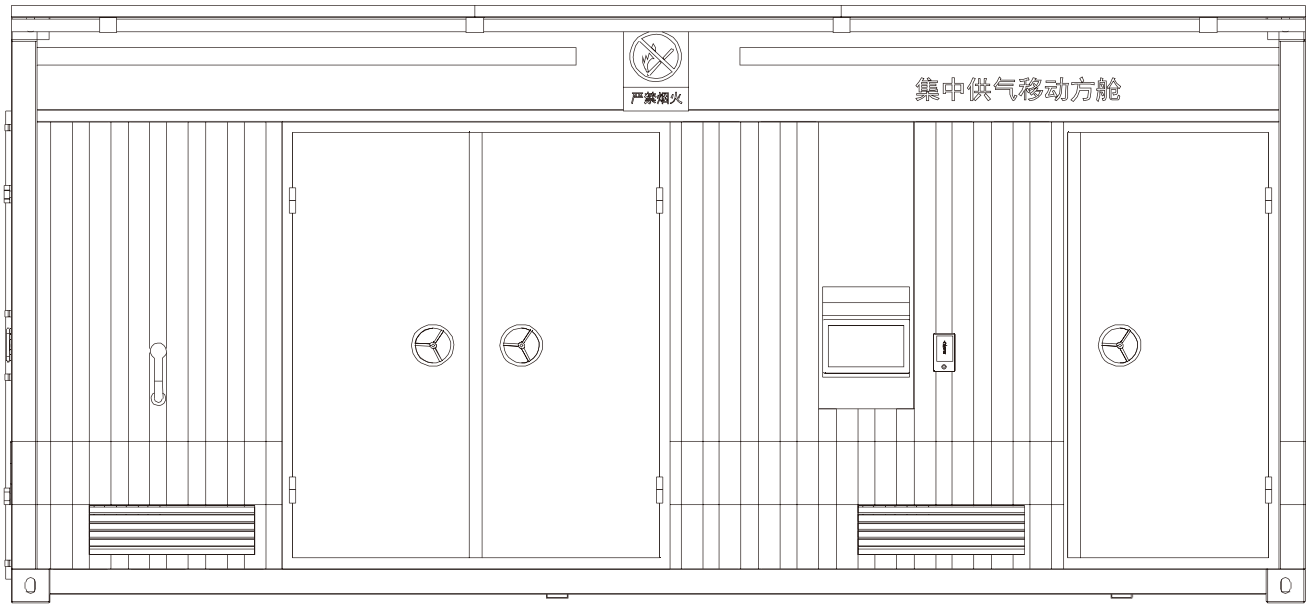

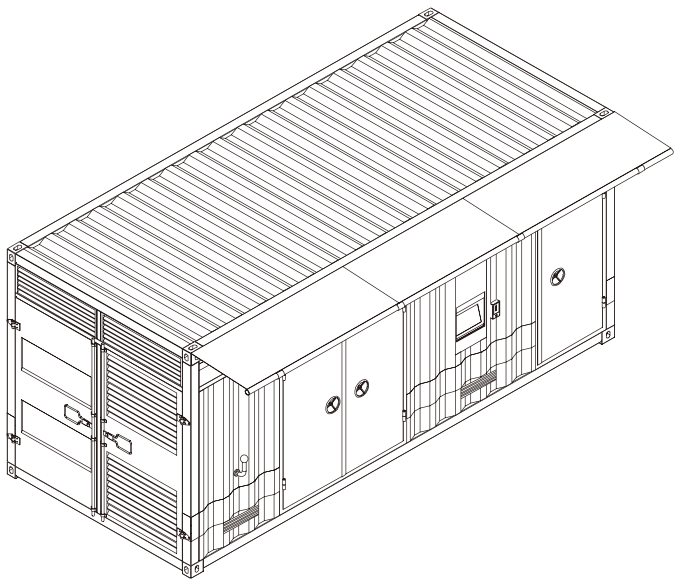

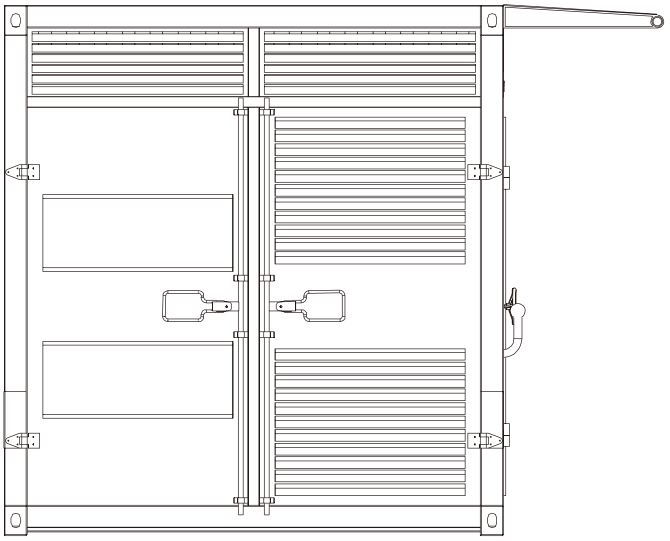

综合监测控制系统

Integrated Monitoring and Control System



产品概述 Product overview

◆ KU100型 综合监测控制系统 通过高精度的各类气体传感器，数模(AD) 转换系统将气体信号(如压力、流量等)转换成数字信号并在屏幕上实时显示。用户可通过触摸屏对各路气体的报警或相应动作整定值进行设定，系统可根据设定值进行相应的输出(如欠压预警值、气体报警值等)控制。实现用气曲线显示、报警内容自动保存。显示界面可切换。通过RS-485 把数据上传。具有压力报警、流量统计、泄漏报警、强排风机自动启停(可手动启动)、紧急停止按钮、报警短信通知等功能。

The system converts gas signals (such as pressure, flow, etc.) into digital signals and displays them on the screen in real time through various types of high-precision gas sensors and digital-to-analog (AD) conversion systems.The user can set the alarm of each gas or the corresponding action setting value through the touch screen.The system can control the corresponding output (such as undervoltage forecast alarm value, gas value, etc.) according to the set value. It can display gas consumption curve, automatically save alarm content and switch display interface.It can display gas consumption curve, automatically save alarm content, switch display interface and upload data through RS-485.The system also has pressure alarm, flow statistics, leakage alarm, automatic start and stop of strong exhaust fan (can be manually started), emergency stop button, alarm SMS notification and other functions.

综合监测控制系统

Integrated Monitoring and Control System



技术参数 Specifications

◆型号Ordering Number:KUZU100

◆外型尺寸Outline Size: 宽L470mm 高H335mm 厚W70mm

◆ 触摸屏尺寸Touch screen size:15in 英寸

◆触摸屏分辨率Touch screen resolution:1366*768 65K色Colour 亮度uminance300nit

◆ 工作温度:Working Temperature 0-50度,湿度humidness10-90%

◆ 处理器processor: 采用双核 MCU。

◆ 通信接口 Communication interface:采用RS485,TCP/IP等多种数据上传接口,方便用户集中管理及控制A variety of data upload interfaces, convenient centralized management and control。

◆ 采集口 Collecting port:标准的共计21个模拟量接口,用于采集压力传感 器信号A total of 21 analog standard interfaces to collect pressure sensorsignals(4-20 ma)。

◆ 开关量接口 Switching interface:火焰探测器、烟雾探测器接口 Flame detector, smoke detector interface

◆ 输出接口Output interface1:标配4组电磁阀控制端口Four sets of solenoid valve control ports are standard,2组排风控制端口 2 groups of risk control ports。

◆ 输出接口Output interface2:标配4组分级报警灯输出端口,用于多房间或多楼层的分别报警Four sets of graded alarm light output ports are standard for separate alarms in multiple rooms or multiple floors。

◆ 扩展数据接口 Extended data interface:可燃气探测器使用MODBUS总线连接,可以连接1-35个泄漏探测器。1-35路流量计,6路气柜 Combustible gas detectors are connected with the MODBUS can be connected to 1-35 leak detectors、1-35 flow meter and 6 gas cabinet

安装尺寸图 Dimensions

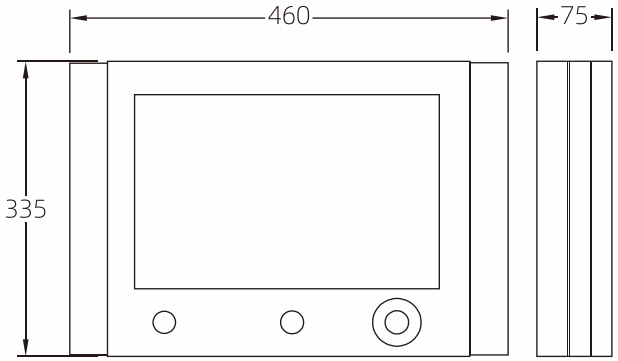

订购指南 Order Information

选型序列举例 Typical Ordering Number EX:KUZU100	功能	尺寸(mm)			本体材质
基本型号 Basic Ordering Number	function	长 L	宽 W	高 H	Boby Materials
气体报警控制器KUZU100	报警记录查询功能Alarm record retention	460	70	335	钢
	事故紧急切断功能Emergency cut-off				
	气体泄漏报警功能Gas leak alarm				
	烟感报警功能 Smoke alarm				
	低压报警功能 Low voltage alarm				
	火焰侦测功能 Flame detection				
功能可选配 Other Options					

气体监控报警器
Gas monitoring alarm



气体监控报警器
Gas monitoring alarm

技术参数 Specifications

◆型号Ordering Nimber：KUZU200
◆额定电压Rated voltage：AC220V/50Hz
◆额定功率Rated Power：40W/80W
◆输入信号Input current：4-20mA
◆输入信号量Number of input signals：21路signal line(10.2’)/40(15.5’)
◆输出接点Output contact point：≤2路signal line
◆输出接点容量Output contact capacity：DC24V3A/AC2203A
◆通讯接口Communication interface：RS485
◆外型尺寸Outline size：280*205*60(10.2’),420*280*70(15.6’)
◆触摸屏尺寸Touch screen size：10.2/15.6寸
◆精度Display accuracy：0.5FS

产品概述 Product overview

◆实时显示气体压力数值Real-time display of gas pressure values。
◆具备高压和低压报警功能 high and low pressure alarm function。
◆报警时，提示报警原因，并实现同步声光报警 When the alarm, with synchro nous sound and light display alarm reason
◆压力报警时同步向外输出信号(无源接点或DC24有源)Synchronous output signal when pressure alarm(Passive contact or DC24 active)
◆高、低报警值默认常规范围，可以根据现场要求设定The default normal range of high and low alarm values can be set according to site requirements, and can be set according to actual requirements。
◆报警故障可自动保存最后16条记录Fault alarm automatically saves the last 16 records。
◆可选配带有RS-485通讯接口和网口，连接通讯接口，利用专用软件，进行中央总监控并能够实现远程监控Optional with RS-485 communication interface and internetwork to connect the communication interface.Special software can be used for central monitoring and remote monitoring。

安装尺寸图
Dimensions

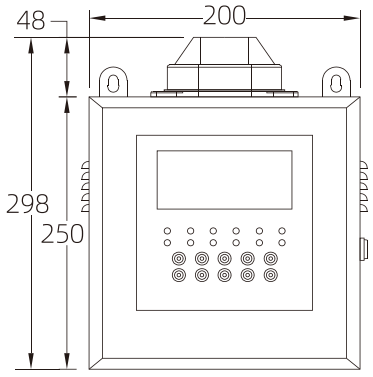

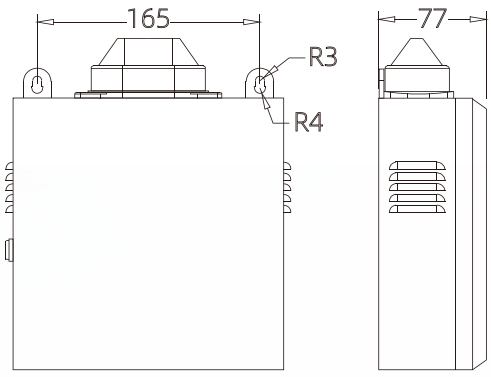

订购指南 Order Information

选型序列举例 Typical Ordering Number EX:KUZU200	功能	尺寸（mm）			本体材质
基本型号 Basic Ordering Number	function	长 L	宽 W	高 H	Boby Materials
KUZU200	报警声光功能 Audible and visual alarm	200	77	298	钢
	气体浓度实时显示 Real-time display of gas concentration				
	支持RS485通讯 Compatible with RS485 communication				
功能可选配 Other Options					

点型气体探测器

Point gas detector



点型气体探测器
Point flammable gas detector

安装尺寸图
Dimensions

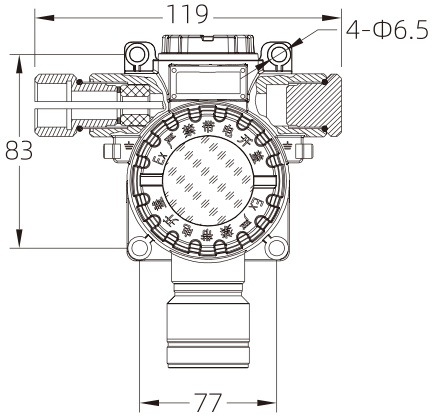

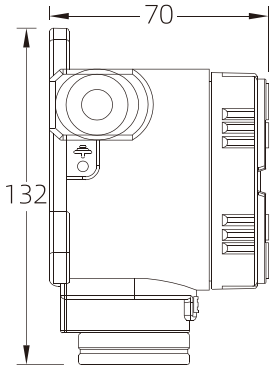

技术参数 Specifications

◆型号Ordering Number：KUZU-9600-1/KUZU-9600-2

◆外型尺寸Outline Size：185mm*156mm*85mm

◆气体浓度实时显示，并显示当前状态（正常、低报、高报、故障）Gas concentration is displayed in real time(Normal, high and low pressure, failure)；

◆支持浓度校准，可以根据需求进行调整 With concentration calibration function, and adjust according to actual requirements；

◆同时支持总线RS485通讯、分线4~20ma通讯 Compatible with main line RS485 communication, branch line 4 to 20ma communication；

◆设有便于操作的高性能微处理器和遥控器High performance microprocessor and remote control for easy operation；

◆ 开关量报警输出，自动开启风机和电磁阀 Excessive gas concentration alarm output, automatically open the fan and solenoid valve；

◆模块化设计，便于接线和检修 Modular design for easy wiring and maintenance,；

◆安装方式，壁挂式Wall-mounted installation,

产品概述 Product overview

◆KUZU-XLBJ-9600-口 气体探测器Gas leak detector,是我公司独立开发、功能实用、操作方便的探测产品用，可安装在II类防爆环境的危险区域和非防爆区域使用 This product is independently developed by our company, functional and convenient to operate gas leakage detection products, can be installed in class II explosion-proof environment of dangerous areas and non-explosion-proof areas for use.

◆本产品的设计、制造及检验均遵循以下国家标准The design, manufacture and inspection of this product are in accordance with the following national standards：GB15322.1-2019《工业及商业用途点型可燃气体探测器》《Point flammable gas detector for industrial and commercial use》
GB3836.1-2010《爆炸性环境 第1部分：设备通用要求》《Explosive atmospheres - Part 1: General requirements for equipment》
GB3836.2-2010《爆炸性环境第2部分：由隔爆外壳“d”保护的设备》《Explosive atmospheres - Part 2: Equipment protected by flameproof outer shell "d"》

订购指南 Order Information

选型序列举例 Typical Ordering Number EX:KUZU-9600	功能	尺寸（mm）			本体材质
基本型号 Basic Ordering Number	function	长 L	宽 W	高 H	Boby Materials
SS-9600-2（Explosion-proof）	报警声光功能 Audible and visual alarm	119	70	132	合金
	气体浓度实时显示 Real-time display of gas concentration				
	支持RS485通讯 Compatible with RS485 communication				
	支持浓度校准 With concentration calibration				
	模块化设计Modular design				
功能可选配 Other Options					

切断阀
Shut-off valve



技术参数 Specifications

- 型号Ordering Number：KUZU-1762015KEX.1450
  KUZU-5231015KEX
- 外型尺寸Outline Size：85mm*136mm*85mm
- 压力Pressure：0.25-1.6Mpa,0.3-5Mpa,

切断阀
Shut-off valve

安装尺寸图
Dimensions

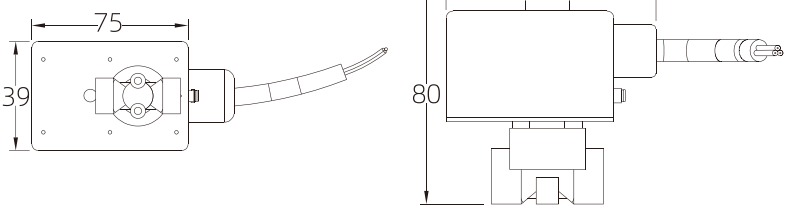

订购指南 Order Information

选型序列举例 Typical Ordering Number EX:KUZU-1762015KEX EX:KUZU-5231015KEX	进气链接方式	出气链接方式	尺寸（mm）			本体材质
基本型号 Basic Ordering Number	Inlet Connection	Outlet Connection	长 L	宽 W	高 H	Boby Materials
KUZU-1762015KEX（普通款）(Conventional)	1/4"-1/2"NPT(F)	1/4"-1/2"(卡套Tube fitting)	75	39	80	SUS316L
KUZU-5231015KEX（防爆款）(Explosion-proof)	1/4"-1/2"NPT(F)	1/4"-1/2"(卡套Tube fitting)	75	39	80	SUS316L
		Other options				



技术参数 Specifications

- 型号Ordering Number：KUZU-H900
- 外型尺寸Outline dimension：70mm*70mm*275mm
- 电压电压：220V
- 功率power:1000W
- 最大使用压力Max Working Pressure:30MPa
- 适用气体Applicable gas:二氧化碳CO2

加热器
Heater

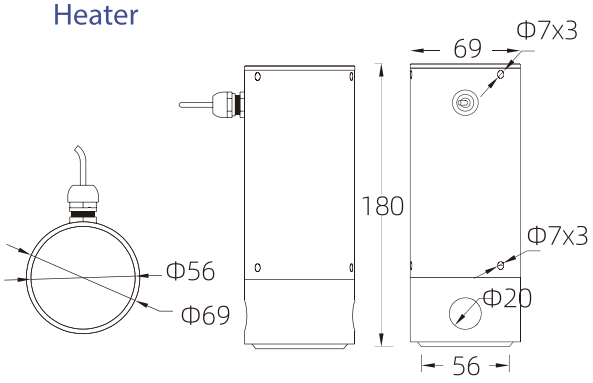

订购指南 Order Information

选型序列举例 Typical Ordering Number EX:KUZU-1762015KEX EX:KUZU-5231015KEX	进气链接方式	出气链接方式	尺寸（mm）			本体材质
基本型号 Basic Ordering Number	Inlet Connection	Outlet Connection	长 L	宽 W	高 H	Boby Materials
SS-H900	1/4"*1/2"NPT(F)	1/4"-1/2"(卡套 Tube fitting)	69	69	180	SUS316L
		Other options				

压力传感器
Pressure sensor



技术参数 Specifications

- 型号 Ordering Number：KUZU-XP-A101 , KUZU-XP-B201
- 外型尺寸Outline Size：85mm*136mm*85mm
- 量程 Pressure Rate：0-25Mpa
- 输出 Output current：4-20mA
- 供电 rated voltage：24VDC
- 精度 Display accuracy：0.5%FS
- 防爆标志 Explosion-proof mark：ExdiiC16Gb

压力传感器
Pressure sensor

安装尺寸图
Dimensions

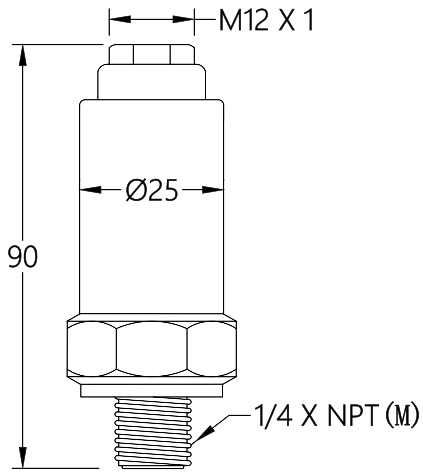

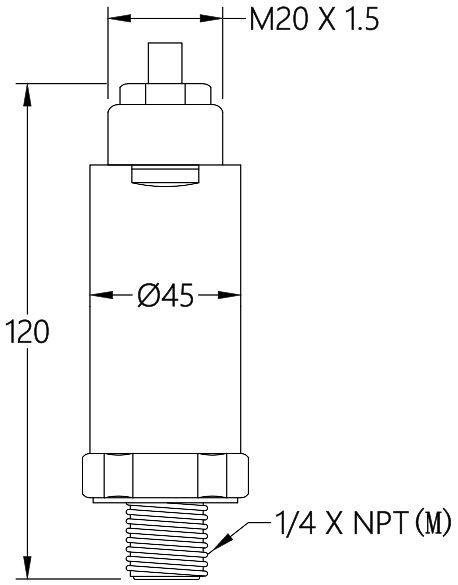

订购指南 Order Information

选型序列举例 Typical Ordering Number EX:KUZU-1762015KEX EX:KUZU-5231015KEX	安装螺纹	量程Range	尺寸 (mm)		本体材质
基本型号 Basic Ordering Number	Connection	Mpa	长 L	宽 W	Boby Materials
SS-XP-A101 (普通款) (Conventional)	1:M20*1.5 2:1/4NPT (M) 3:M12*1	1:0-0.6 2:0-6 3:0-20 4:0-25	90	25	SUS316L
SS-XP-B201 (防爆款) (Explosion-proof)			120	45	SUS316L

管道焊接、切割完整解决方案

COMPLETE SOLUTION FOR PIPELINE CUTTING AND WELDING



产品概述 Product overview

◆高性能平口机、切割机、自动焊机，专业从事超高纯、超洁净管道系统的切割、平口、焊接、检测，产品覆盖半导体、太阳能、医药、生物工程、航空航天等多个领域。

Our company independently develops and produces high-performance flat mouth machines, cutting machines, and automatic welding machines, specializing in the cutting, flat mouth, welding, and testing of ultra-high purity and ultra-clean pipeline systems. Our

管道焊接、切割完整解决方案

COMPLETE SOLUTION FOR PIPELINE CUTTING AND WELDING



性 能 Feature

- AC220V 50Hz/60Hz单相供电 Single-phase power supply
- PDC200A 直流IGBT 逆变机芯，可靠的硬件，保证焊接稳定性 Dc IGBT inverterInternal chip, reliable hardware, ensure welding stability
- 采样德国西门子PLC模块组与台湾维纶10寸工业触摸屏，图形化操作界面、
- 内置专家参数，易操作使编程变的简单 Sample graphical operation interface of Siemens PLC module group and Taiwan Vinylon 10 inch industrial touch screen\Built-in expert parameters for easy operation and programming
- 内置水箱，采用进口意大利水泵，满足高空作业时水流量 Water tank with built-in Italian brand water pump to meet the needs of water flow when working at altitude
- 内置微型免费维护打印机，无需跟换墨盒，一键打印及自动打印功能Built-in micro printer with no cartridge changes and free maintenance;One-clickprinting Or automatic printing function
- 故障保护，自动诊断功能并保持故障告警信息，降低误操作带来的损伤Fault protection,automatic diagnosis and fault alarm information to reduce the damage causedby misoperation
- 焊枪与焊机连接采用欧洲快装接头，分体结构便于便有于现场安装施工The welding head and the welding machine are connected with quick connector to facilitate on-site installation
- 点焊功能，焊接前四点点焊，防止焊接过程中受热变形 Spot welding function toprevent heat deformation during welding
- 提供密码保护、中英文语言切换、焊接管口记录、系统时间日期修改、脉动旋转等功能 Other functions: password protection, Chinese and English switching, welding port record, system date modification, pulsation rotation, etc
- 焊把嵌入式线控器，方便高空作业对焊接的控制 Built-in wire control welding handle for high altitude work
- 自动HOME键，位置自动归位到开口位置 When the HOME button is pressed, the position automatically returns to the open position
- 强大的区间功能，可提供8个阶段数据 Wide data range feature to provide 8 stages of data

主要参数
MAIN PARAMETERS

电源类型 Power Source Type	逆变 Invert
机芯冷却 Movement Cooling	风机自适应 Fan Adaptive
焊接电流 Welding Current	3～200A
暂载率(30°C) Momentary loading factor	220V 50/60HZ
输入电压 Input voltage	110V/220V/100～240V 50/60Hz
水冷 Water Cooling	内置循环水箱 3L Built-in recirculating water tank
功率(W) Power	4KVA
控制系统 Control System	工业PC Industrial
控制功能 Control Function	气体开关控制/电流控制/焊接速度控制 Gas switch control/Current control/Welding speed control
可存储程序 Storable Program	999个
象限个数 Number Of Quadrants	20个
打印方式 Printing Method	手动打印/自动打印/焊完补打/U盘打印 Manual printing/Automatic printing/Welding completed supplementary printing/USB printing
扩展功能 Extended Function	具备一拖二功能 具备无线遥控功能Equipped with one-drag-two function; Equipped with wireless remote control function

小型焊接焊机头 5H/10H

SMALL WELDING MACHINE HEAD





小型焊接焊机头 5H/10H

手持式气路焊接焊头,用于特气等小管径及管件的焊接,广泛用于半导体、航空、生物工业、超高纯水系统、实验室、仪表仪器等使用频率高的工作场所。

Hand-held gas welding torch, used for welding small diameter pipes and fittings, widely used in semiconductor, aviation, biotechnology industry, ultra-pure systems, laboratories, instruments and other high-frequency workplaces.

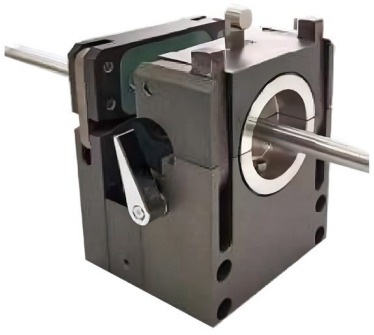



安装尺寸图
Dimensions

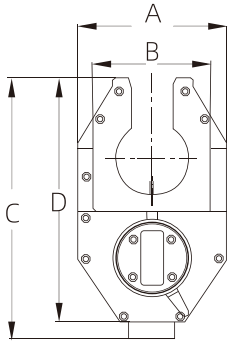

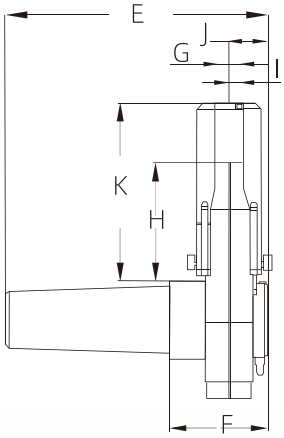

订购指南 Order Information		
型号Model	5H	10H
可焊管径Weldable Pipe Diameter	3-12.7(1/8-1/2)	6-25.4(1/4-1)
可焊壁厚Weldable Wall Thickness	≤2.11mm	≤2.11mm
焊枪宽度Welding Torch Width	70	105
焊枪厚度Welding Gun Thickness	38	45

平口机系列

Tube facing tool Series



性能特征

- ◆专用于不锈钢管端高精度平口加工Special for stainless steel tube end to consistently machining flat
- ◆垂直无毛刺No burrs-free tube end
- ◆可快速更换卡具；刀具和工件，操作简单Quick replacement of fixtures; Tools and workpieces, easy to operate
- ◆双刃高效特殊涂层刀具High quality specially coated double-edged tools
- ◆无需其他额外的工具No additional tools required
- ◆体积小重量轻，使用灵活安全Compact, lightweight, flexible and safe
- ◆内置电池，无需外接电源，手持式端面加工Built-in battery, no external power supply, Hand-held processing。

主要参数
Specifcation

订购指南 Order Information

型号Series 适用范围Applicable range		MFM1.0电池式 Battery type	MFM1.5插电式 Plug-in electric type	MFM2.0 Battery type
管径OD	mm	3-25.4	3-38.1	6-50.8
	inch	0.18-1.0	0.118-1.5	
壁厚Wall thickness	mm	2	2	2
	inch	0.079	0.079	0.079
尺寸Size	mm	230*55*265	230*75*265	230*85*265
	inch	9.05*2.16*10.43	9.05*2.75*10.43	9.0*3.34*10.43
电机转速Motor speed	R/min	0-350	0-500	0-500
加工材料 Adaptable material		不锈钢、高合金钢、低合金钢、铝、铜等 Stainless steel, alloy steel, aluminum, copper, etc		

钨极磨削机

Tungsten electrode grinding tool



钨极磨削机 Tungsten electrode grinding tool

在 TIG 氩弧焊接、等离子焊接等需要使用钨极的场合，一般都需要磨削钨极。便携式钨极磨削机，适用于钨极的磨尖、端面的平头和切断，在以下场合钨极都非常重要，包括：管管自动焊接、管板自动焊接、氩弧自动焊、焊管生产线、等离子焊接、微束等离子、微弧氩弧焊等

In TIG argon arc welding, plasma welding need to use tungsten electrode occasions, generally need to grind tungsten electrode.This tool is suitable for the sharpening of tungsten electrode, flat head and cutting of end face. Tungsten electrode is very important in the following situations, including: automatic tube welding, automatic tube plate welding, automatic argon arc welding, welding pipe production line, plasma welding, micro-beam plasma, micro-arc argon arc welding.

特点 Feature

◆角度精确,锥面完美 The angle is precise, and the conical surface is perfect.

◆自动化焊接及手工TIG焊接理想的焊前准备工具Ideal pre-welding preparation tool for automatic welding and manual TIG welding

◆便携式,轻松携带到任何需要的场所 Portable, easy to carry to any place where it is needed.

◆灵活性,经济性集于一身,可长时间工作 Flexibility and cost-effective ness combined, it can work for a long time.

◆简洁版设计,国内优质电机,性价比高; Simplified design, domestic high-quality motor, high cost performance;

主要参数
MAIN PARAMETERS

设备型号	pulse compact
外观尺寸 mm	66*260
Overall dimensions inch	2.59*10.24
	280
功率 (W) Power	220V ,50—60Hz
电源 Power Supply	110V ,50—60Hz
	1.7
电缆长度 (m) Cable length	28000
空转转速 (r/min) Idle Speed	55
工作声音强度 (db) Work Noise Intensity	22.5o 30o
打磨角度 Grinding Angle	1.0 1.6 2.4
钨极直径 (mm) Tungsten Electrode Diameter	1.6 2.4 3.2

订购指南 Order Information

产品 Product	打磨角度 Grinding Ange	钨极直径（mm） Tungsten Electrode Diameter	物料编号 Material Number	设备净重（kg） Net Weight Of Equipment	发运重量（kg） Shipment Weight
pulse compact	22.5/30	1.0/1.6/2.4	500200001	0.9	1.8
pulse compact	22.5/30	1.6/2.4/3.2	500200002	0.9	1.8

实验室气体特性表

Laboratory Gas Property Table

实验室气体特性表 Laboratory Gas Property Table

分子式	中文名称	空气比重 (AIR=1)	钢瓶压力 (PSIG)	钢瓶接口 (CGA/DISS)	瓶内状态	毒	腐	燃	双层管
Ar	氩气	1.378	2600	580/718	气	否	否	否	否
AsH3	砷化氢(砷烷)	2.69	205	350/632	液	毒	否	燃	需
B2H6	乙硼烷	0.95	2200	350/632	气	毒	否	否	需
BCL3	三氯化硼	4.03	4.4	660/634	液	毒	腐	否	需
BF3	三氟化硼	2.387	1600	330/642	气	毒	腐	否	否
C2CLF5	五氟氯乙烷	5.569	101	660/716	液	毒	否	否	否
C2H2	乙炔(电石气)	0.91	250	510/N/A	气	否	否	燃	否
C2H6	乙烷	0.96	544	350/N/A	气	否	否	燃	需
C4H10	丁烷	0.058	16.3	510/N/A	液	毒	否	燃	否
CF4	四氟化碳	3.038	2000	320/716	气	否	否	否	否
CH4	甲烷	0.555	2400	350/632	气	否	否	燃	需
CL2	氯气	2.49	85	660/728	液	毒	腐	否	需
CLF3	三氟化氯	3.14	6.8	670/728	液	毒	腐	否	需
CO	一氧化碳	0.968	1650	350/724	气	毒	否	燃	需
CO2	二氧化碳	1.522	830	320/716	液	否	否	否	否
D2	氘气(重氢)	0.14	2000	350/724	气	毒	否	燃	否
F2	氟气	1.3	300	679/N/A	气	毒	腐	否	否
GeCL4	四氯化锗	2	−13.23	N/A/N/A	液	毒	腐	否	需
GeH4	四氯化锗(锗烷)	2.645	88	350/632	气	毒	否	燃	需
H2	氢气	0.07	2600	350/724	气	否	否	燃	否
H2S	硫化氢	1.189	253	330/722	液	毒	否	燃	需
H2Se	硒化氢	2.79	124.9	350/632	液	毒	否	燃	需
HBr	溴化氢	2.77	320	330/634	液	毒	腐	否	需
HCL	氯化氢	1.268	613	330/634	液	毒	腐	否	需
He	氦气	0.138	2600	580/718	气	否	否	否	否
HF	氟化氢	0.69	0.6	670/638	液	毒	腐	否	需
N2	氮气	0.967	2600	580/718	气	否	否	否	否
N2O	一氧化二氮(笑气)	1.53	745	326/712	液	毒	否	否	否
Ne	氖气	0.696	1800	580/718	气	否	否	否	否
NF3	三氟化氮	2.46	1450	330/640	气	毒	腐	否	需
NH3	氨气	0.597	114.1	660/720	液	毒	腐	否	需
NO	一氧化氮	30	2000	660/716	气	毒	否	否	需
O2	氧气	1.105	2600	540/714	气	否	否	否	否
O3	臭氧	1.66			气	毒	否	否	否
PH3	磷化氢(磷烷)	1.184	593	350/632	液	毒	否	燃	需
POCL3	氯氧化碳	2	−14.19	N/A/N/A	液	毒	腐	否	需
SF6	六氟化碳	53.11	320	590/716	液	否	否	否	否
SiCL4	四氯化硅	1.48	−11	N/A/636	液	毒	腐	否	否
SiF4	四氟化硅	3.7	1000	330/642	气	毒	否	否	否
SiH2CL2	二氯二氢硅	3.52	9.1	678/636	液	毒	腐	燃	需
SiH4	硅烷	1.114	1000	350/632	气	毒	腐	燃	需
SiHCL3	三氯氢硅	4.7	20	678/636	液	毒	腐	燃	需
WF6	六氟化钨	10.8	2.4	670/638	液	毒	腐	燃	需
Xe	氙气	4.56	970	580/718	气	否	否	否	否

注： 有毒性气体　腐蚀性气体　可燃性气体　双套管　液体需加热

www.sh-kuzu.com

来自中国气体减压阀制造商为全球提供气体安全输送解决方案

From China gas regulator manufacturers provide the global gas safety transport solutions

全国销售热线

400-800-1501

提供精准气体输送解决方案

Provide precise gas delivery solutions

地址：上海市浦东新区外高桥自贸区美桂北路343号
邮编：201206
E-MAIL:kuzu_1@126.com

诚招全国代理商